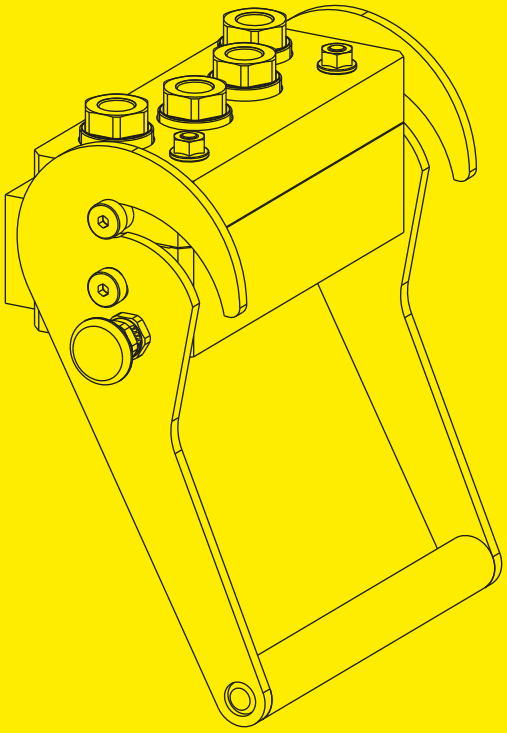

ALFAGOMMA GROUP

QUICK RELEASE & MULTI-K COUPLINGS

ARGUS

ARGUS is one of the ALFAGOMMA's Group brands.

Since 1936 ARGUS has been manufacturing high-quality hydraulic components. Ever since the name ARGUS has stood for quality, safety and technical competence. Many years of experience and constant effort to optimize our products enable us to quickly and flexibly respond to customers' needs.

The products are manufactured in our Italian plants.

TAILOR MADE

We develop every kind of quick release and multi-coupling system according to customer's needs or specifications

// QUICK RELEASE COUPLING

For fast and easy connections of hydraulic hoses, the ALFAGOMMA range of fluid components includes the ARGUS series of quick disconnect couplings, with products complying to international standards ISO 7241-1 A & B, ISO 5675 and ISO 16028, having poppet and flat face valve respectively.

The standardised design assures the complete interchangeability with corresponding couplings currently in use.

Made from high strength carbon steel as the basic material, hardened in parts subject to wear, ARGUS couplings feature a chrome-III zinc plating with a long lasting resistance to oxidation (**TOP COAT**, patented).

The mechanical and fluid dynamic performance are maximised by means of specific geometries defined through CFD calculations. Additional extensive testing is carried out after production following the requirements of ISO 7241-2 standard.

ISO-A range includes the true general purpose quick release couplings, with sizes from 1/4" to 1 1/2", BSPP, NPTF and metric threaded connections, and working pressure up to 350 bar. Agricultural machinery is the main application for ISO-A for ISO-A couplings.

ISO 7241-1 B series is more employed in the industrial sector (pressures can reach 400 bar), for equipment powered and controlled by hydraulic systems.

The **flat faced range** is the optimal choice to avoid circuit contamination and oil leakage when connecting and disconnecting.

Flat faced couplings are widely used on construction equipment, but also in hostile environments where spillage can constitute a danger. They have sizes from 1/4" to 1", constant working pressure of 350 bar and minimised flow losses.

Screw quick couplings are also included in the ARGUS family. Connection under residual pressure is made possible by specific couplings with poppet or flat face valve. Further sizes and types, including customised multi-coupling systems, are available on request.

POPPET VALVE	FLAT FACE VALVE	SCREW TYPE		MULTI-COUPLING	CHECK VALVES	SWIVEL CONNECTOR
		POPPET	FLAT FACE			
SVK-ISO-A	FPK 350 bar	HDK	RK	MULTI-K*	RV	SWIVEL CONNECTOR
SVK-ISO-A SS	FPK-P MP*	PTK	RKN*		PRV	
SVK-ISO-B			RKN-P*		PRV SPECIAL	
SNK			AK		LBS	
SNKB			BK			
SVK-1H-ISO-A			DK			
SVK-1H						
PVK-RACING (ALU)						
SPK-1H						
SRK-1H						
SRK-1H PE PLUS*						
SHK						
SLK						

* under pressure

// TOP COAT TREATMENT

Thanks to the exclusive ALFAGOMMA **TOP COAT** – Galvanic Coating – proprietary technology, the complete range of ARGUS Quick release couplings can boast an extraordinary wear and corrosion resistance, so as to guarantee a longer lifespan to your system.

ALFAGOMMA **TOP COAT** is based on a system of trivalent passivation which reaches outstanding rusting and corrosion resistance levels. Tested in accordance with ASTM B117-03 and UNI ISO 9227 standards, ALFAGOMMA **TOP COAT** ensures over 1000 hours to red rust.

All ALFAGOMMA metal parts feature TOP COAT an innovative proprietary surface treatment developed and patented by the ALFAGOMMA Research & Development team

- Corrosion resistance exceeding **500 hrs** white and **1000 hrs** red rust resistance – **ASTM B117-03** and **UNI ISO 9227** standards
- **Exceptional interfacial adhesion** and outstanding impact resistance, with almost no micro-cracking, chipping and delamination
- **Trivalent passivation and high resistance sealing**
- Chromium(VI)-free in conformity with the **European directive 2000/53/EC**

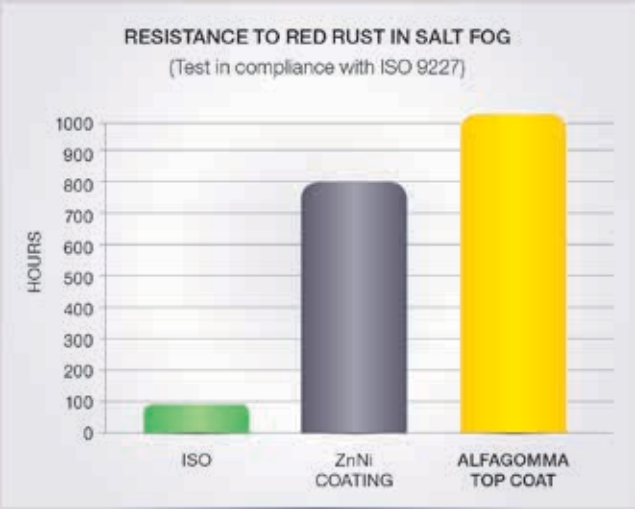

// INDEX

// **SVK-ISO-A** **8**
POPPET STANDARD ISO 7241 A

// **SVK-ISO-A SS** **14**
POPPET STANDARD ISO 7241 A SS

// **SVK-ISO-B** **17**
POPPET STANDARD ISO 7241 B

// **SNK** **20**
POPPET INDUSTRY STANDARD

// **SNKB** **23**
BALL INDUSTRY STANDARD

// **SHK** **25**
HIFLOW TRUCK TYPE POPPET

// **SLK** **28**
LOCKABLE TYPE POPPET

// **SVK-1H-ISO-A** **31**
POPPET STANDARD ISO 7241 A

// **SVK-1H** **39**
POPPET STANDARD ISO 5675

// **PVK-RACING** **48**
POPPET

// **SPK-1H** **50**
POPPET STANDARD ISO 5675

// **SRK-1H** **52**
POPPET RIGID PIPES ISO 5675

// **SRK-1H PE PLUS** **55**
POPPET RIGID PIPES ISO 5675

// **ACCESSORIES FOR SVK-1H, RV AND LBS** **57**

// **QUICK RELEASE ADAPTER** **59**

// **QUICK RELEASE ADAPTER** **61**
CONNCECTION UNDER PRESSURE

// **FPK** **63**
FLAT FACE STANDARD ISO 16028

// **FPK-P** **70**
FLAT FACE STANDARD ISO 16028

// **BK** **72**
BRAKE VALVE FLAT FACE STANDARD ISO 5676

// **DK** **74**
DIAGNOSTIC FLAT FACE STANDARD ISO 15171-1

// **HDK** **77**
SCREW TYPE POPPET STANDARD ISO 14541

// **RK** **84**
SCREW TYPE FLAT FACE

// **RKN** **89**
SCREW TYPE FLAT FACE

// **RKN-P** **92**
SCREW TYPE FLAT FACE

// **AK** **95**
SCREW TYPE FLAT FACE

// **PTK** **97**
SCREW TYPE POPPET STANDARD ISO 14540

// **MULTI-K** **100**
MULTI-COUPLING

// **RV** **109**
NON RETURN VALVE

// **PRV** **112**
CARTRIDGE NON RETURN VALVE

// **LBS** **114**
EXCESS FLOW CHECK VALVE

// **SWIVEL CONNECTOR** **115**
SWIVEL JOINT

Design and dimensions shown may be changed without prior notice

// SVK-ISO-A

POPPET STANDARD ISO 7241 A

DN 6 to 51

to max WP 350 bar

// Quick and simple coupling and uncoupling
// Cost effective

General features: ARGUS ISO 7241-1 series “A” quick release couplings are used for quick coupling and uncoupling of hydraulic lines. During the coupling action in zero or low-pressure ranges, valves that release or block the flow are automatically activated. The SVK-ISO-A quick release coupling, formed by the coupling plug and the coupling socket, is connected by pushing on a sleeve. This guarantees a flush connection between the two coupling halves.

Materials: galvanised steel with hardened parts subject to wear - NBR O-rings (other materials optional) - Thermoplastic dust cap and dust plug. Cr-III zinc plating through additional passivation for improved surface protection (TOP COAT for metric version).

Application: suitable for liquid lines with mineral oil-based hydraulic fluids to DIN 51524 T1+T2.

Norm:
ISO 7241 A

Temperature range:
-20 °C +100 °C
Temp. range for metric version -30 °C to +125 °C

Note: rated flow / pressure drop compliant with ISO 7241-1 standard.
Specific instructions for installation, use and maintenance are separately provided.

Design and dimensions shown may be changed without prior notice

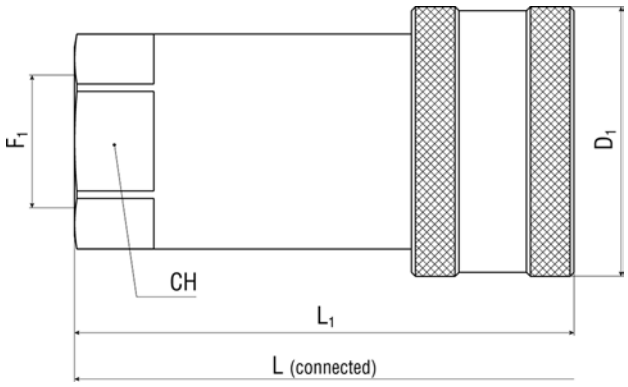

STANDARD ISO 7241 A - POPPET SVK-ISO-A

Female coupling - Female thread

Item Code				WP Conn.	BP Disconn.	Thread 1	F1	D1	CH	L1	L
	Dash	mm	inch	MPa	MPa			mm	mm	mm	mm
1219613	04	6,0	1/4"	35,0	140,0	BSPP	1/4-19	26,0	19,0	50,0	74,20
1219607	06	10,0	3/8"	31,5	126,0	BSPP	3/8-19	31,5	22,0	56,0	78,50
1232129	06	10,0	3/8"	31,5	126,0	BSPP	1/2-14	32,0	27,0	56,0	74,50
1219617	08	13,0	1/2"	27,0	108,0	BSPP	1/2-14	38,5	27,0	66,0	88,20
1219609	12	19,0	3/4"	25,0	100,0	BSPP	3/4-14	48,0	34,0	82,5	110,40
1219619	16	25,0	1"	20,0	80,0	BSPP	1-11	56,0	41,0	100,0	132,90
1223504	20	32,0	1 1/4"	20,0	80,0	BSPP	1 1/4-11	70,0	50,0	117,0	150,00
1219620	24	38,0	1 1/2"	16,0	64,0	BSPP	1 1/2-11	84,5	60,0	133,0	167,00
1223392	32	51,0	2"	10,0	40,0	BSPP	2-11	99,0	75,0	165,0	210,00
1219612	04	6,0	1/4"	35,0	140,0	NPTF	1/4-18	26,0	19,0	50,0	74,20
1222491	06	10,0	3/8"	31,5	126,0	NPTF	3/8-18	31,5	22,0	57,1	78,50
1222488	08	13,0	1/2"	27,0	108,0	NPTF	1/2-14	38,5	27,0	66,0	88,20
1222494	12	19,0	3/4"	25,0	100,0	NPTF	3/4-14	48,0	34,0	82,5	110,40
1222495	16	25,0	1"	20,0	80,0	NPTF	1-11 1/2	56,0	41,0	100,0	132,90
1229489	24	38,0	1 1/2"	16,0	64,0	NPTF	1 1/2-11 1/2	84,5	60,0	133,0	167,00
1229490	32	51,0	2"	10,0	40,0	NPTF	2-11 1/2	99,0	75,0	165,0	210,00

BSPP connection according to DIN 3852-2-X, NPTF connection according to ANSI B1-20.3, metric connection according to ISO 6149-1.

Design and dimensions shown may be changed without prior notice

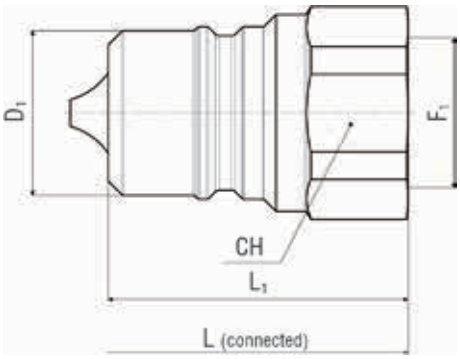

STANDARD ISO 7241 A - POPPET SVK-ISO-A

Male coupling - Female thread

Item Code				WP Conn.	BP Disconn.	Thread 1	F1	D1	CH	L1	L
	Dash	mm	inch	MPa	MPa			mm	mm	mm	mm
1219611	04	6,0	1/4"	35,0	140,0	BSPP	1/4-19	11,8	19,0	38,5	74,20
1219606	06	10,0	3/8"	31,5	126,0	BSPP	3/8-19	17,3	22,0	36,5	78,50
1219615	08	13,0	1/2"	27,0	108,0	BSPP	1/2-14	20,5	27,0	44,0	88,20
1219608	12	19,0	3/4"	25,0	100,0	BSPP	3/4-14	29,0	34,0	55,0	110,40
1219618	16	25,0	1"	20,0	80,0	BSPP	1-11	34,3	41,0	66,0	132,90
1223512	20	32,0	1 1/4"	20,0	80,0	BSPP	1 1/4-11	45,0	50,0	75,0	150,00
1223511	24	38,0	1 1/2"	16,0	64,0	BSPP	1 1/2-11	55,0	60,0	83,5	167,00
1223395	32	51,0	2"	10,0	40,0	BSPP	2-11	65,0	75,0	105,0	210,00
1219610	04	6,0	1/4"	35,0	140,0	NPTF	1/4-18	11,8	19,0	38,5	74,20
1222492	06	10,0	3/8"	31,5	126,0	NPTF	3/8-18	17,3	22,0	39,0	78,50
1222489	08	13,0	1/2"	27,0	108,0	NPTF	1/2-14	20,5	27,0	44,0	88,20
1222490	12	19,0	3/4"	25,0	100,0	NPTF	3/4-14	29,0	34,0	55,0	110,40
1222487	16	25,0	1"	20,0	80,0	NPTF	1-11 1/2	34,3	41,0	66,0	132,90
1229496	24	38,0	1 1/2"	16,0	64,0	NPTF	1 1/2-11 1/2	55,0	60,0	83,5	167,00
1229497	32	51,0	2"	10,0	40,0	NPTF	2-11 1/2	65,0	75,0	105,0	210,00

BSPP connection according to DIN 3852-2-X, NPTF connection according to ANSI B1-20.3, metric connection according to ISO 6149-1.

Design and dimensions shown may be changed without prior notice

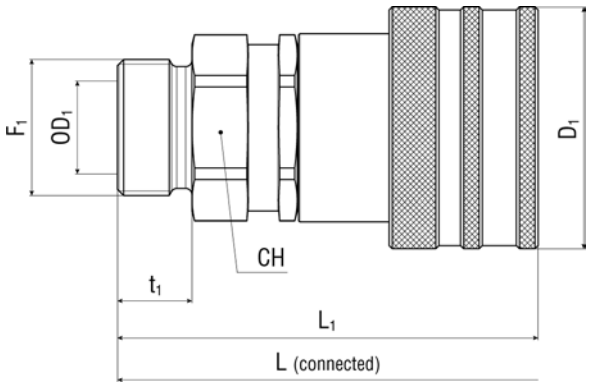

STANDARD ISO 7241 A - POPPET SVK-ISO-A

Female coupling - Metric 24° light/heavy series

TOP COAT

Item Code				WP Conn.	BP Disconn.	Thread 1	F1	OD1	D1	t1	CH	L1	L
	Dash	mm	inch	MPa	MPa			mm	mm	mm	mm	mm	mm
1233909	04	6,0	1/4"	35,0	140,0	D24L	M12X1.5	6	25,0	10,0	19,0	52,0	84,60
1229374	04	6,0	1/4"	35,0	140,0	D24L	M14X1.5	8	25,0	10,0	19,0	52,0	84,60
1233910	06	10,0	3/8"	31,5	126,0	D24L	M14X1.5	8	32,0	10,0	22,0	60,5	100,70
1229375	06	10,0	3/8"	31,5	126,0	D24L	M16X1.5	10	32,0	11,0	22,0	61,5	102,70
1233925	08	13,0	1/2"	27,0	108,0	D24L	M14X1.5	8	39,0	10,0	27,0	65,8	100,10
1233927	08	13,0	1/2"	27,0	108,0	D24L	M16X1.5	10	39,0	11,0	27,0	66,8	102,10
1229377	08	13,0	1/2"	27,0	108,0	D24L	M18X1.5	12	39,0	11,0	27,0	66,8	102,10
1229378	08	13,0	1/2"	27,0	108,0	D24L	M22X1.5	15	39,0	12,0	27,0	67,8	104,10
1233928	08	13,0	1/2"	27,0	108,0	D24L	M26X1.5	18	39,0	12,0	32,0	67,8	104,10
1233929	12	19,0	3/4"	25,0	100,0	D24L	M18X1.5	12	46,0	11,0	38,0	80,0	117,90
1233930	12	19,0	3/4"	25,0	100,0	D24L	M22X1.5	15	46,0	12,0	38,0	81,0	119,90
1229380	12	19,0	3/4"	25,0	100,0	D24L	M26X1.5	18	46,0	12,0	38,0	81,0	119,90
1229381	12	19,0	3/4"	25,0	100,0	D24L	M30X2	22	46,0	14,0	38,0	83,0	123,90
1233931	16	25,0	1"	20,0	80,0	D24L	M26X1.5	18	52,0	12,0	43,0	94,0	137,40
1233932	16	25,0	1"	20,0	80,0	D24L	M30X2	22	52,0	14,0	43,0	96,0	141,40
1229382	16	25,0	1"	20,0	80,0	D24L	M36X2	28	52,0	14,0	45,0	96,0	141,40
1233933	16	25,0	1"	20,0	80,0	D24L	M45X2	35	52,0	16,0	50,0	98,0	145,40
1233934	06	10,0	3/8"	31,5	126,0	D24S	M16X1.5	8	32,0	12,0	22,0	62,5	104,70
1233935	06	10,0	3/8"	31,5	126,0	D24S	M18X1.5	10	32,0	12,0	22,0	62,5	104,70
1229419	06	10,0	3/8"	31,5	126,0	D24S	M20X1.5	12	32,0	12,0	22,0	62,5	104,70
1233936	08	13,0	1/2"	27,0	108,0	D24S	M18X1.5	10	39,0	12,0	27,0	67,8	104,10
1233937	08	13,0	1/2"	27,0	108,0	D24S	M20X1.5	12	39,0	12,0	27,0	67,8	104,10
1233938	08	13,0	1/2"	27,0	108,0	D24S	M22X1.5	14	39,0	14,0	27,0	69,8	108,10
1229422	08	13,0	1/2"	27,0	108,0	D24S	M24X1.5	16	39,0	14,0	27,0	69,8	108,10
1233939	12	19,0	3/4"	25,0	100,0	D24S	M24X1.5	16	46,0	14,0	38,0	83,0	123,90
1233940	12	19,0	3/4"	25,0	100,0	D24S	M30X2	20	46,0	16,0	38,0	85,0	127,90
1234911	12	19,0	3/4"	25,0	100,0	D24S	M36X2	25	46,0	18,0	41,0	87,0	131,90
1233941	16	25,0	1"	20,0	80,0	D24S	M30X2	20	53,0	16,0	45,0	98,0	145,40
1229426	16	25,0	1"	20,0	80,0	D24S	M36X2	25	53,0	18,0	45,0	100,0	149,40
1233942	16	25,0	1"	20,0	80,0	D24S	M42X2	30	53,0	20,0	46,0	102,0	153,40
1233943	16	25,0	1"	20,0	80,0	D24S	M52X2	38	53,0	22,0	55,0	104,0	157,40

Metric connection according to DIN EN ISO 8434-1.

For related male coupling see product "Male coupling - Female thread" at page 33

Design and dimensions shown may be changed without prior notice

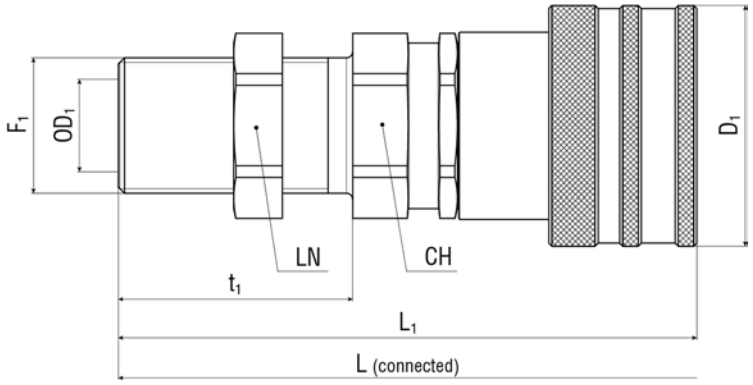

STANDARD ISO 7241 A - POPPET SVK-ISO-A

Female coupling - Metric 24° light series bulkhead

TOP COAT

Item Code				WP Conn.	BP Disconn.	Thread 1	F1	OD1	D1	t1	CH	LN	L1	L
	Dash	mm	inch	MPa	MPa			mm	mm	mm	mm	mm	mm	mm
1233955	04	6,0	1/4"	35,0	140,0	D24L	M12X1.5	6	25,0	25,0	19,0	17,0	67,0	114,60
1229396	04	6,0	1/4"	35,0	140,0	D24L	M14X1.5	8	25,0	25,0	19,0	19,0	67,0	114,60
1233956	06	10,0	3/8"	31,5	126,0	D24L	M14X1.5	8	32,0	25,0	22,0	19,0	75,5	124,70
1229397	06	10,0	3/8"	31,5	126,0	D24L	M16X1.5	10	32,0	27,0	22,0	22,0	77,5	128,70
1233957	08	13,0	1/2"	27,0	108,0	D24L	M14X1.5	8	38,0	25,0	27,0	19,0	81,8	132,10
1233958	08	13,0	1/2"	27,0	108,0	D24L	M16X1.5	10	38,0	27,0	27,0	22,0	83,8	136,10
1229399	08	13,0	1/2"	27,0	108,0	D24L	M18X1.5	12	38,0	26,0	27,0	24,0	81,8	132,10
1229400	08	13,0	1/2"	27,0	108,0	D24L	M22X1.5	15	38,0	30,0	27,0	30,0	85,8	140,10
1233959	08	13,0	1/2"	27,0	108,0	D24L	M26X1.5	18	38,0	30,0	32,0	36,0	85,8	140,10
1233960	12	19,0	3/4"	25,0	100,0	D24L	M18X1.5	12	46,0	30,0	38,0	24,0	99,0	155,90
1233961	12	19,0	3/4"	25,0	100,0	D24L	M22X1.5	15	46,0	30,0	38,0	30,0	99,0	155,90
1229402	12	19,0	3/4"	25,0	100,0	D24L	M26X1.5	18	46,0	36,0	38,0	36,0	105,0	167,90
1229403	12	19,0	3/4"	25,0	100,0	D24L	M30X2	22	46,0	42,0	36,0	41,0	111,0	179,90
1234912	16	25,0	1"	20,0	80,0	D24L	M26X1.5	18	53,0	36,0	45,0	36,0	118,0	185,40
1233962	16	25,0	1"	20,0	80,0	D24L	M30X2	22	53,0	42,0	45,0	41,0	124,0	197,40
1229404	16	25,0	1"	20,0	80,0	D24L	M36X2	28	53,0	43,0	45,0	46,0	125,0	199,40
1233963	16	25,0	1"	20,0	80,0	D24L	M45X2	35	53,0	47,0	50,0	55,0	129,0	207,40

Metric connection according to DIN EN ISO 8434-1.

For related male coupling see product "Male coupling - Metric 24° light series bulkhead" at page 38

Design and dimensions shown may be changed without prior notice

STANDARD ISO 7241 A - POPPET SVK-ISO-A

Dust plug for female coupling

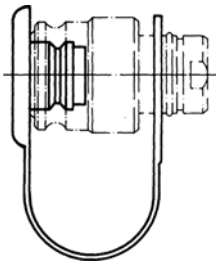

Item Code	Colour	Material			
			Dash	mm	inch
1219283	RED	PE	04	6,0	1/4"
1219281	RED	PE	06	10,0	3/8"
1224393	BLK	PVC	08	13,0	1/2"
1222514	BLU	PVC	08	13,0	1/2"
1237767	GRN	PE	08	13,0	1/2"
1219284	RED	PE	08	13,0	1/2"
1222515	YEL	PVC	08	13,0	1/2"
1219282	RED	PE	12	19,0	3/4"
1219285	RED	PE	16	25,0	1"

STANDARD ISO 7241 A - POPPET SVK-ISO-A

Dust cap for male coupling

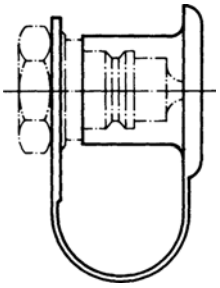

Item Code	Colour	Material			
			Dash	mm	inch
1239710	BLU	PE	04	6,0	1/4"
1219446	RED	PE	04	6,0	1/4"
1239711	BLU	PE	06	10,0	3/8"
1219444	RED	PE	06	10,0	3/8"
1237769	BLK	PE	08	13,0	1/2"
1224391	BLU	PVC	08	13,0	1/2"
1237768	GRN	PE	08	13,0	1/2"
1219447	RED	PE	08	13,0	1/2"
1222521	YEL	PVC	08	13,0	1/2"
1239712	BLU	PE	12	19,0	3/4"
1219445	RED	PE	12	19,0	3/4"
1239713	BLU	PE	16	25,0	1"
1219448	RED	PE	16	25,0	1"

Design and dimensions shown may be changed without prior notice

// SVK-ISO-A SS

POPPET STANDARD ISO 7241 A SS

DN 6 to 40

to max WP 140 bar

// Quick and simple coupling and uncoupling
// Stainless steel AISI 316

General features: ARGUS ISO 7241-1 series “A” quick release couplings are used for quick coupling and uncoupling of hydraulic lines. During the coupling action in zero or low-pressure ranges, valves that release or block the flow are automatically activated. The SVK-ISO-A SS quick release coupling, formed by the coupling plug and the coupling socket, is connected by pushing on a sleeve. This guarantees a flush connection between the two coupling halves.

Materials: stainless steel AISI 316 - FKM O-rings (other materials optional) - Thermoplastic dust cap and dust plug.

Application: suitable for liquid lines with mineral oil-based hydraulic fluids to DIN 51524 T1+T2, water or other aggressive fluids. Resistant to outdoor and harsh environments.

Norm: ISO 7241 A

Temperature range:
-20 °C +100 °C

Note: rated flow / pressure drop compliant with ISO 7241-1 standard.
Specific instructions for installation, use and maintenance are separately provided.

Design and dimensions shown may be changed without prior notice

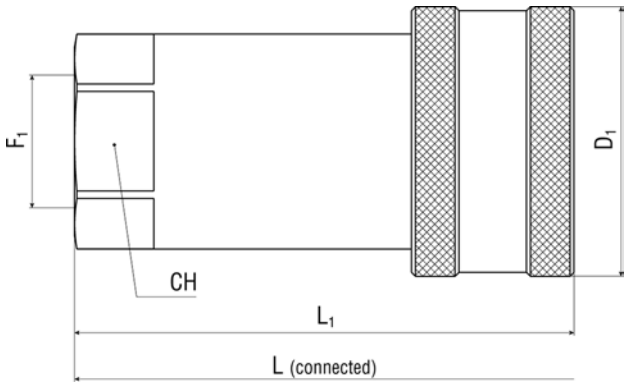

STANDARD ISO 7241 A - POPPET SVK-ISO-A SS

Female coupling - Female thread

Item Code				WP Conn.	BP Disconn.	Thread 1	F1	D1	CH	L1	L
	Dash	mm	inch	MPa	MPa			mm	mm	mm	mm
1233982	04	6,0	1/4"	14,0	72,0	BSPP	1/4-19	26,0	19,0	50,0	74,20
1233983	06	10,0	3/8"	14,0	72,0	BSPP	3/8-19	31,5	22,0	57,1	78,50
1233984	08	13,0	1/2"	10,0	40,0	BSPP	1/2-14	38,5	27,0	66,0	88,20
1233985	12	19,0	3/4"	10,0	40,0	BSPP	3/4-14	48,0	34,0	82,5	110,40
1233986	16	25,0	1"	7,0	28,0	BSPP	1-11	56,0	41,0	100,0	132,90
1233987	20	32,0	1 1/4"	7,0	28,0	BSPP	1 1/4-11	70,0	50,0	117,0	150,00
1233988	24	38,0	1 1/2"	7,0	28,0	BSPP	1 1/2-11	84,5	60,0	133,0	167,00
1233989	04	6,0	1/4"	14,0	72,0	NPTF	1/4-18	26,0	19,0	50,0	74,20
1233990	06	10,0	3/8"	14,0	72,0	NPTF	3/8-18	31,5	22,0	57,1	78,50
1233991	08	13,0	1/2"	10,0	40,0	NPTF	1/2-14	38,5	27,0	66,0	88,20
1233992	12	19,0	3/4"	10,0	40,0	NPTF	3/4-14	48,0	34,0	82,5	110,40
1233993	16	25,0	1"	7,0	28,0	NPTF	1-11 1/2	56,0	41,0	100,0	132,90
1233994	20	32,0	1 1/4"	7,0	28,0	NPTF	1 1/4-11 1/2	70,0	50,0	117,0	150,00
1233995	24	38,0	1 1/2"	7,0	28,0	NPTF	1 1/2-11 1/2	84,5	60,0	133,0	167,00

Design and dimensions shown may be changed without prior notice

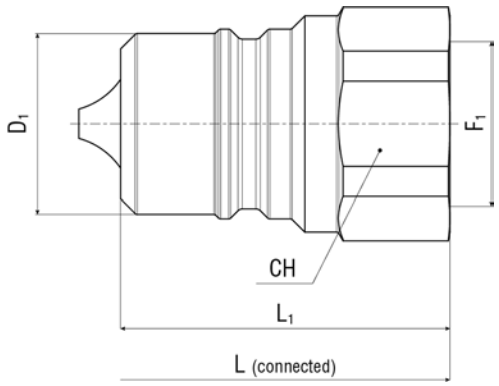

STANDARD ISO 7241 A - POPPET SVK-ISO-A SS

Male coupling - Female thread

Item Code				WP Conn.	BP Disconn.	Thread 1	F1	D1	CH	L1	L
	Dash	mm	inch	MPa	MPa			mm	mm	mm	mm
1233996	04	6,0	1/4"	14,0	72,0	BSPP	1/4-19	11,8	19,0	38,5	74,20
1233997	06	10,0	3/8"	14,0	72,0	BSPP	3/8-19	17,3	22,0	39,0	78,50
1233998	08	13,0	1/2"	10,0	40,0	BSPP	1/2-14	20,5	27,0	44,0	88,20
1233999	12	19,0	3/4"	10,0	40,0	BSPP	3/4-14	29,0	34,0	55,0	110,40
1234000	16	25,0	1"	7,0	28,0	BSPP	1-11	34,3	41,0	66,0	132,90
1234001	20	32,0	1 1/4"	7,0	28,0	BSPP	1 1/4-11	45,0	50,0	75,0	150,00
1234002	24	38,0	1 1/2"	7,0	28,0	BSPP	1 1/2-11	55,0	60,0	83,5	167,00
1234003	04	6,0	1/4"	14,0	72,0	NPTF	1/4-18	11,8	19,0	38,5	74,20
1234004	06	10,0	3/8"	14,0	72,0	NPTF	3/8-18	17,3	22,0	39,0	78,50
1234005	08	13,0	1/2"	10,0	40,0	NPTF	1/2-14	20,5	27,0	44,0	88,20
1234006	12	19,0	3/4"	10,0	40,0	NPTF	3/4-14	29,0	34,0	55,0	110,40
1234007	16	25,0	1"	7,0	28,0	NPTF	1-11 1/2	34,3	41,0	66,0	132,90
1234008	20	32,0	1 1/4"	7,0	28,0	NPTF	1 1/4-11 1/2	45,0	50,0	75,0	150,00
1234009	24	38,0	1 1/2"	7,0	28,0	NPTF	1 1/2-11 1/2	55,0	60,0	83,5	167,00

Design and dimensions shown may be changed without prior notice

// SVK-ISO-B

POPPET STANDARD ISO 7241 B

DN 6 to 25

to max WP 300 bar

// Quick and simple coupling and uncoupling

General features: ARGUS ISO 7241-1 series “B” quick release couplings are used for quick coupling and uncoupling of hydraulic lines. During the coupling action in zero or low-pressure ranges, valves that release or block the flow are automatically activated. The SVK-ISO-B quick release coupling, formed by the coupling plug and the coupling socket, is connected by pushing on a sleeve. This guarantees a flush connection between the two coupling halves.

Materials: galvanised steel with hardened parts subject to wear - NBR O-rings (other materials optional) - Thermoplastic dust cap and dust plug. Cr-III zinc plating through additional passivation for improved surface protection. Also available in stainless steel.

Application: suitable for liquid lines with mineral oil-based hydraulic fluids to DIN 51524 T1+T2.

Norm: ISO 7241 B

Temperature range:
-20 °C +100 °C

Note: rated flow / pressure drop compliant with ISO 7241-1 standard.
Specific instructions for installation, use and maintenance are separately provided.

Design and dimensions shown may be changed without prior notice

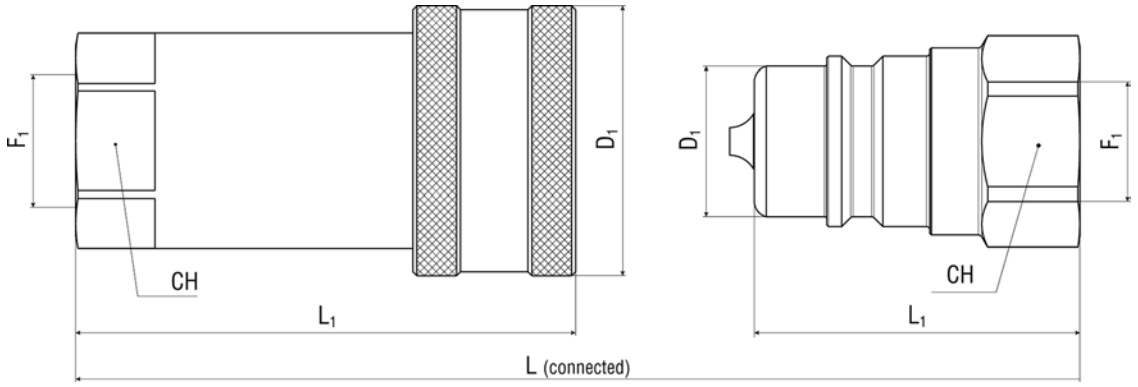

STANDARD ISO 7241 B - POPPET SVK-ISO-B

Female coupling - Female thread

Item Code				WP Conn.	BP Disconn.	Thread 1	F1	D1	CH	L1	L
	Dash	mm	inch	MPa	MPa			mm	mm	mm	mm
1223633	04	6,0	1/4"	30,0	120,0	BSPP	1/4-19	28,5	19,0	58,0	72,00
1223636	06	10,0	3/8"	28,0	112,0	BSPP	3/8-19	35,0	24,0	65,0	81,00
1223632	08	13,0	1/2"	25,0	100,0	BSPP	1/2-14	44,5	28,5	74,0	93,50
1223635	12	19,0	3/4"	20,0	80,0	BSPP	3/4-14	54,0	36,0	92,0	113,00
1223631	16	25,0	1"	15,0	60,0	BSPP	1-11	63,5	41,0	103,0	127,00
1233775	04	6,0	1/4"	30,0	120,0	NPTF	1/4-18	28,5	19,0	58,0	72,00
1233777	06	10,0	3/8"	28,0	112,0	NPTF	3/8-18	35,0	24,0	65,0	81,00
1233779	08	13,0	1/2"	25,0	100,0	NPTF	1/2-14	44,5	28,5	74,0	93,50
1233781	12	19,0	3/4"	20,0	80,0	NPTF	3/4-14	54,0	36,0	92,0	113,00
1233783	16	25,0	1"	15,0	60,0	NPTF	1-11 1/2	63,5	41,0	103,0	127,00

STANDARD ISO 7241 B - POPPET SVK-ISO-B

Male coupling - Female thread

Item Code				WP Conn.	BP Disconn.	Thread 1	F1	D1	CH	L1	L
	Dash	mm	inch	MPa	MPa			mm	mm	mm	mm
1223639	04	6,0	1/4"	30,0	120,0	BSPP	1/4-19	14,2	19,0	36,0	72,00
1223642	06	10,0	3/8"	28,0	112,0	BSPP	3/8-19	19,1	24,0	40,0	81,00
1223638	08	13,0	1/2"	25,0	100,0	BSPP	1/2-14	23,5	28,5	46,5	93,50
1223641	12	19,0	3/4"	20,0	80,0	BSPP	3/4-14	31,4	36,0	56,0	113,00
1223637	16	25,0	1"	15,0	60,0	BSPP	1-11	37,8	41,0	63,0	127,00
1233776	04	6,0	1/4"	30,0	120,0	NPTF	1/4-18	14,2	19,0	36,0	72,00
1233778	06	10,0	3/8"	28,0	112,0	NPTF	3/8-18	19,1	24,0	40,0	81,00
1233780	08	13,0	1/2"	25,0	100,0	NPTF	1/2-14	23,5	28,5	46,5	93,50
1233782	12	19,0	3/4"	20,0	80,0	NPTF	3/4-14	31,4	36,0	56,0	113,00
1233784	16	25,0	1"	15,0	60,0	NPTF	1-11 1/2	37,8	41,0	63,0	127,00

Design and dimensions shown may be changed without prior notice

STANDARD ISO 7241 B - POPPET SVK-ISO-B

Dust plug for female coupling

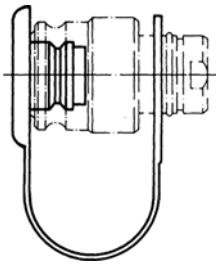

Item Code	Colour	Material			
			Dash	mm	inch
1237536	BLK	PE	04	6,0	1/4"
1224400	RED	PE	04	6,0	1/4"
1237537	BLK	PE	06	10,0	3/8"
1224401	RED	PE	06	10,0	3/8"
1237538	BLK	PE	08	13,0	1/2"
1224402	RED	PE	08	13,0	1/2"
1237539	BLK	PE	12	19,0	3/4"
1224403	RED	PE	12	19,0	3/4"
1237540	BLK	PE	16	25,0	1"
1224404	RED	PE	16	25,0	1"

STANDARD ISO 7241 B - POPPET SVK-ISO-B

Dust cap for male coupling

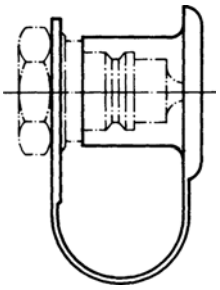

Item Code	Colour	Material			
			Dash	mm	inch
1237541	BLK	PE	04	6,0	1/4"
1224394	RED	PE	04	6,0	1/4"
1237542	BLK	PE	06	10,0	3/8"
1224395	RED	PE	06	10,0	3/8"
1237543	BLK	PE	08	13,0	1/2"
1224396	RED	PE	08	13,0	1/2"
1237544	BLK	PE	12	19,0	3/4"
1224397	RED	PE	12	19,0	3/4"
1233293	BLK	PE	16	25,0	1"
1224398	RED	PE	16	25,0	1"

Design and dimensions shown may be changed without prior notice

// SNK

POPPET INDUSTRY STANDARD

DN 6 to 25

to max WP 350 bar

// Agricultural/normal series
// Compatibility with other couplings in-use
// DN 12 compatible with ISO 7241-1-A

General features: ARGUS Agricultural/Normal quick release couplings are used for quick coupling and uncoupling of hydraulic lines. During the coupling action in zero or low-pressure ranges, valves that release or block the flow are automatically activated. The SNK quick release coupling, formed by the coupling plug and the coupling socket, is connected by pushing on a sleeve. This guarantees a flush connection between the two coupling halves.

Materials: galvanised steel with hardened parts subject to wear - NBR O-rings (other materials optional) - Thermoplastic dust cap and dust plug. Cr-III zinc plating through additional passivation for improved surface protection.

Application: suitable for liquid lines with mineral oil-based hydraulic fluids to DIN 51524 T1+T2.

Temperature range:
-20 °C +100 °C

Note: specific instructions for installation, use and maintenance are separately provided.

Design and dimensions shown may be changed without prior notice

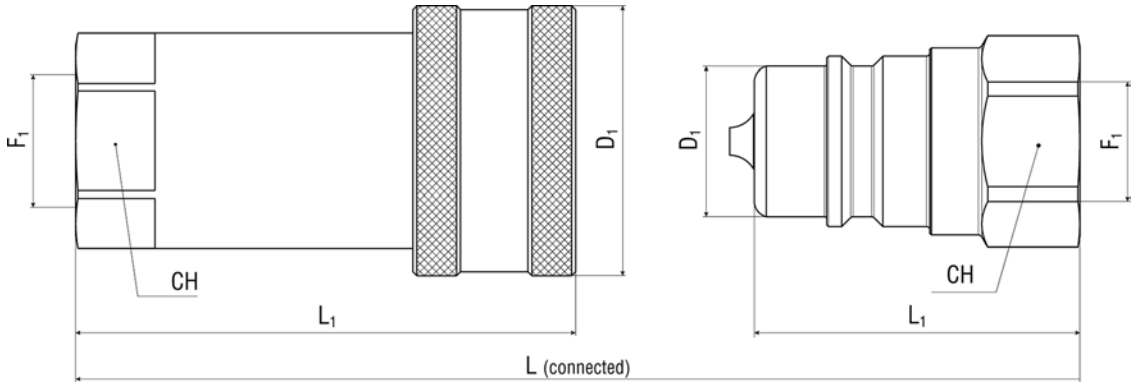

INDUSTRY STANDARD - POPPET SNK

Female coupling - Female thread

Item Code				WP Conn.	BP Disconn.	Thread 1	F1	D1	CH	L1	L
	Dash	mm	inch	MPa	MPa			mm	mm	mm	mm
1223670	04	6,0	1/4"	35,0	140,0	BSPP	1/4-19	27,6	19,0	53,5	72,00
1223672	06	10,0	3/8"	27,0	108,0	BSPP	3/8-19	34,0	24,0	63,0	83,00
1223671	12	19,0	3/4"	20,0	80,0	BSPP	3/4-14	48,2	34,0	82,5	108,00
1223669	16	25,0	1"	20,0	80,0	BSPP	1-11	56,5	41,0	96,5	127,00
1232516	04	6,0	1/4"	35,0	140,0	NPTF	1/4-18	27,6	19,0	53,5	72,00
1232517	06	10,0	3/8"	27,0	108,0	NPTF	3/8-18	34,0	24,0	63,0	83,00
1232519	12	19,0	3/4"	20,0	80,0	NPTF	3/4-14	48,2	34,0	82,5	108,00
1232520	16	25,0	1"	20,0	80,0	NPTF	1-11 1/2	56,5	41,0	96,5	127,00

BSPP connection according to DIN 3852-2-X, NPTF connection according to ANSI B1-20.3, metric connection according to ISO 6149-1

INDUSTRY STANDARD - POPPET SNK

Male coupling - Female thread

Item Code				WP Conn.	BP Disconn.	Thread 1	F1	D1	CH	L1	L
	Dash	mm	inch	MPa	MPa			mm	mm	mm	mm
1223674	04	6,0	1/4"	35,0	140,0	BSPP	1/4-19	14,1	19,0	36,0	72,00
1223676	06	10,0	3/8"	27,0	108,0	BSPP	3/8-19	18,9	24,0	40,0	83,00
1223675	12	19,0	3/4"	20,0	80,0	BSPP	3/4-14	27,9	34,0	53,5	108,00
1223673	16	25,0	1"	20,0	80,0	BSPP	1-11	31,3	41,0	63,0	127,00
1232521	04	6,0	1/4"	35,0	140,0	NPTF	1/4-18	14,1	19,0	36,0	72,00
1232522	06	10,0	3/8"	27,0	108,0	NPTF	3/8-18	18,9	24,0	40,0	83,00
1232524	12	19,0	3/4"	20,0	80,0	NPTF	3/4-14	27,9	34,0	49,0	108,00
1232525	16	25,0	1"	20,0	80,0	NPTF	1-11 1/2	31,3	41,0	64,0	127,00

Design and dimensions shown may be changed without prior notice

INDUSTRY STANDARD - POPPET SNK

Dust plug for female coupling

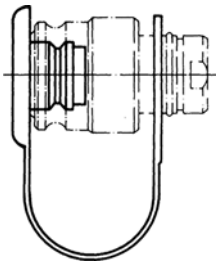

Item Code	Colour	Material			
			Dash	mm	inch
1224385	RED	PE	04	6,0	1/4"
1223630	RED	PE	06	10,0	3/8"
1223629	RED	PE	12	19,0	3/4"
1223626	RED	PE	16	25,0	1"

INDUSTRY STANDARD - POPPET SNK

Dust cap for male coupling

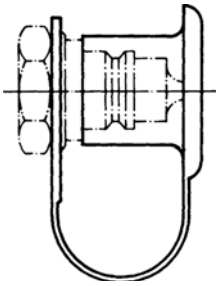

Item Code	Colour	Material			
			Dash	mm	inch
1224383	RED	PE	04	6,0	1/4"
1223625	RED	PE	06	10,0	3/8"
1223624	RED	PE	12	19,0	3/4"
1223621	RED	PE	16	25,0	1"

Design and dimensions shown may be changed without prior notice

// SNKB

BALL INDUSTRY STANDARD

DN 6 to 25

to max WP 350 bar

// Ball valve
// Agricultural/normal series
// Compatibility with other couplings in-use
// DN 12 compatible with ISO 7241-1-A

General features: ARGUS Agricultural/Normal quick release couplings with ball valve are used for quick coupling and uncoupling of hydraulic lines. During the coupling action in zero or lowpressure ranges, valves that release or block the flow are automatically activated. The SNK-B quick release coupling, formed by the coupling plug and the coupling socket, is connected by pushing on a sleeve.

Materials: galvanised steel with hardened parts subject to wear - NBR O-rings (other materials optional) - Thermoplastic dust cap and dust plug. Cr-III zinc plating through additional passivation for improved surface protection.

Application: suitable for liquid lines with mineral oil-based hydraulic fluids to DIN 51524 T1+T2.

Temperature range:
-20 °C +100 °C

Note: specific instructions for installation, use and maintenance are separately provided.

Design and dimensions shown may be changed without prior notice

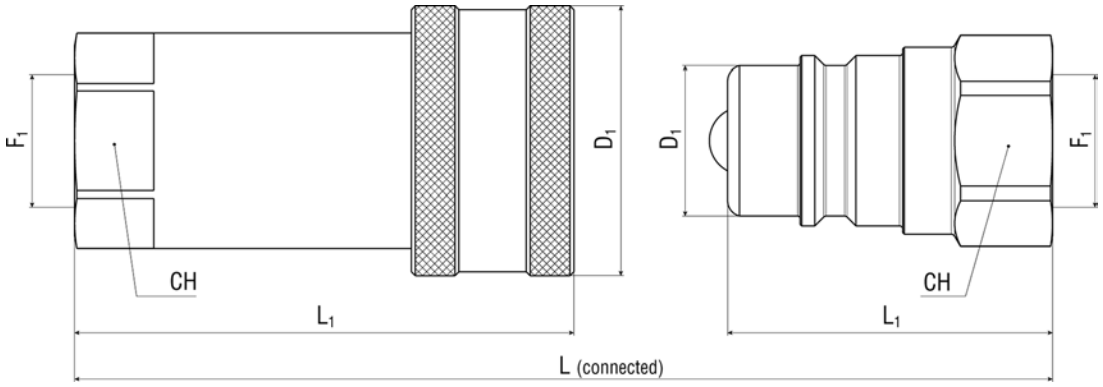

INDUSTRY STANDARD - BALL SNKB

Female coupling - Female thread

Item Code				WP Conn.	BP Disconn.	Thread 1	F1	D1	CH	L1	L
	Dash	mm	inch	MPa	MPa			mm	mm	mm	mm
1223611	04	6,0	1/4"	35,0	140,0	BSPP	1/4-19	27,6	19,0	53,5	72,00
1223614	06	10,0	3/8"	27,0	108,0	BSPP	3/8-19	34,0	24,0	63,0	83,00
1223610	08	13,0	1/2"	27,0	108,0	BSPP	1/2-14	38,5	27,0	66,0	88,20
1223612	12	19,0	3/4"	20,0	80,0	BSPP	3/4-14	48,2	34,0	82,5	108,00
1223609	16	25,0	1"	20,0	80,0	BSPP	1-11	56,5	41,0	96,5	127,00
1234020	04	6,0	1/4"	35,0	140,0	NPTF	1/4-18	27,6	19,0	53,5	72,00
1234021	06	10,0	3/8"	27,0	108,0	NPTF	3/8-18	34,0	24,0	63,0	83,00
1234022	08	13,0	1/2"	27,0	108,0	NPTF	1/2-14	38,5	27,0	66,0	88,20
1234023	12	19,0	3/4"	20,0	80,0	NPTF	3/4-14	48,2	34,0	82,5	108,00
1234024	16	25,0	1"	20,0	80,0	NPTF	1-11 1/2	56,5	41,0	96,5	127,00

INDUSTRY STANDARD - BALL SNKB

Male coupling - Female thread

Item Code				WP Conn.	BP Disconn.	Thread 1	F1	D1	CH	L1	L
	Dash	mm	inch	MPa	MPa			mm	mm	mm	mm
1223617	04	6,0	1/4"	35,0	140,0	BSPP	1/4-19	14,1	19,0	36,0	72,00
1223620	06	10,0	3/8"	27,0	108,0	BSPP	3/8-19	18,9	24,0	40,0	83,00
1223616	08	13,0	1/2"	27,0	108,0	BSPP	1/2-14	20,5	27,0	44,0	88,20
1223618	12	19,0	3/4"	20,0	80,0	BSPP	3/4-14	27,9	34,0	53,5	108,00
1223615	16	25,0	1"	20,0	80,0	BSPP	1-11	31,3	41,0	63,0	127,00
1234025	04	6,0	1/4"	35,0	140,0	NPTF	1/4-18	14,1	19,0	36,0	72,00
1234026	06	10,0	3/8"	27,0	108,0	NPTF	3/8-18	18,9	24,0	40,0	83,00
1234027	08	13,0	1/2"	27,0	108,0	NPTF	1/2-14	20,5	27,0	44,0	88,20
1234028	12	19,0	3/4"	20,0	80,0	NPTF	3/4-14	27,9	34,0	49,0	108,00
1234029	16	25,0	1"	20,0	80,0	NPTF	1-11 1/2	31,3	41,0	64,0	127,00

Design and dimensions shown may be changed without prior notice

// SHK

HIFLOW TRUCK TYPE POPPET

TOP COAT

DN 25

WP 300 bar

// Compatibility with other couplings in-use
// Optional pressure elimination system

General features: ARGUS SHK are used for quick coupling and uncoupling of hydraulic lines. During the coupling action in zero or low-pressure ranges, valves that release or block the flow are automatically activated. The SHK quick release coupling, formed by the coupling plug and the coupling socket, is coupled by pushing on a sleeve. This guarantees a flush connection between the two coupling halves. The sleeve is designed so that it has only to be moved in the relevant direction for disconnecting or connecting of coupling halves.

Materials: galvanised steel with hardened parts subject to wear - HNBR O-rings (other materials optional). Top Coat Cr-III zinc plating with additional trivalent passivation for outstanding surface protection.

Application: suitable for liquid lines with mineral oil-based hydraulic fluids to DIN 51524 T1+T2.

Temperature range:
-20 °C +125 °C

Note: rated flow / pressure drop values on request.
Specific instructions for installation, use and maintenance are separately provided.

Design and dimensions shown may be changed without prior notice

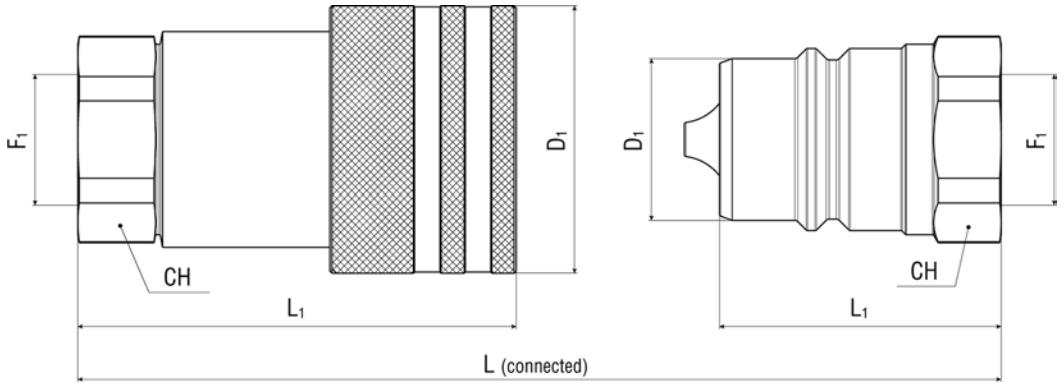

HIFLOW TRUCK TYPE - POPPET SHK

Female coupling - Female thread

Item Code				WP Conn.	BP Disconn.	Thread 1	F1	D1	CH	L1	L
	Dash	mm	inch	MPa	MPa			mm	mm	mm	mm
1233551	16	25,0	1"	30,0	120,0	BSPP	1-11	64,5	46,0	108,0	132,60

BSPP connection according to DIN 3852-2-X.

HIFLOW TRUCK TYPE - POPPET SHK

Male coupling - Female thread

Item Code				WP Conn.	BP Disconn.	Thread 1	F1	D1	CH	L1	L
	Dash	mm	inch	MPa	MPa			mm	mm	mm	mm
1233552	16	25,0	1"	30,0	120,0	BSPP	1-11	38,3	46,0	66,0	132,60

BSPP connection according to DIN 3852-2-X.

Design and dimensions shown may be changed without prior notice

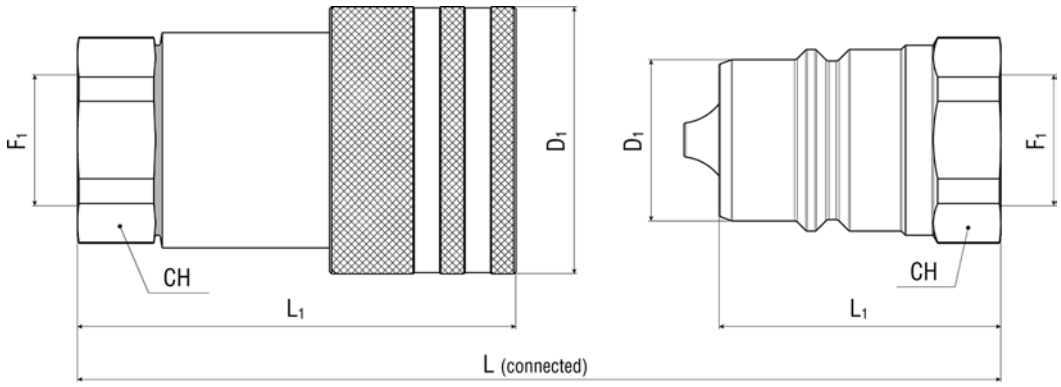

HIFLOW TRUCK TYPE PRESSURE ELIMINATION SYSTEM - POPPET SHK

Female coupling - Female thread

Item Code				WP Conn.	BP Disconn.	Thread 1	F1	D1	CH	L1	L
	Dash	mm	inch	MPa	MPa			mm	mm	mm	mm
1233723	16	25,0	1"	30,0	120,0	BSPP	1-11	64,5	46,0	108,0	132,60

BSPP connection according to DIN 3852-2-X.

HIFLOW TRUCK TYPE PRESSURE ELIMINATION SYSTEM - POPPET SHK

Male coupling - Female thread

Item Code				WP Conn.	BP Disconn.	Thread 1	F1	D1	CH	L1	L
	Dash	mm	inch	MPa	MPa			mm	mm	mm	mm
1233724	16	25,0	1"	30,0	120,0	BSPP	1-11	38,3	46,0	66,0	132,60

BSPP connection according to DIN 3852-2-X.

Design and dimensions shown may be changed without prior notice

// SLK

LOCKABLE TYPE POPPET

TOP COAT

DN 6 to 25

to max WP 450 bar

// Locking system for safety purposes
// Optional pressure elimination system
// Compatibility with other couplings in-use
// Nordic range

General features: ARGUS SLK are used for quick coupling and uncoupling of hydraulic lines. During the coupling action in zero or low-pressure ranges, valves that release or block the flow are automatically activated. The SLK quick release coupling, formed by the coupling plug and the coupling socket, is coupled by pushing on a sleeve. This guarantees a flush connection between the two coupling halves. The sleeve is designed so that it has only to be moved in the relevant direction for disconnecting or connecting of coupling halves.

Materials: galvanised steel with hardened parts subject to wear – NBR O-rings (other materials optional). Top Coat Cr-III zinc plating with additional trivalent passivation for outstanding surface protection.

Application: suitable for liquid lines with mineral oil-based hydraulic fluids to DIN 51524 T1+T2.

Temperature range:
-30 °C +125 °C

Note: rated flow / pressure drop values on request.
Other sizes and connection types available on request.
Specific instructions for installation, use and maintenance are separately provided.

Design and dimensions shown may be changed without prior notice

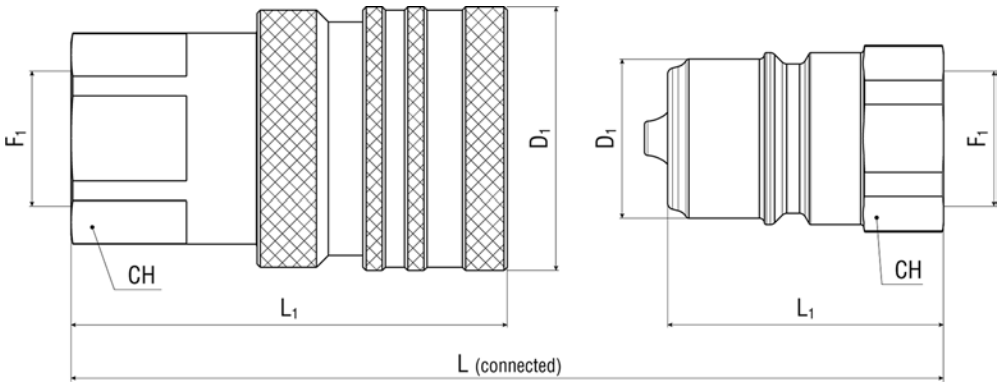

LOCKABLE TYPE - POPPET SLK

Female coupling - Female thread

Item Code				WP Conn.	BP Disconn.	Thread 1	F1	D1	CH	L1	L
	Dash	mm	inch	MPa	MPa			mm	mm	mm	mm
1232506	04	6,0	1/4"	45,0	180,0	BSPP	1/4-19	26,0	21,0	60,0	82,00
1232507	06	10,0	3/8"	35,0	140,0	BSPP	3/8-19	34,0	25,0	61,5	76,50
1232508	08	13,0	1/2"	30,0	120,0	BSPP	1/2-14	40,0	30,0	67,5	85,50
1232509	12	19,0	3/4"	28,0	112,0	BSPP	3/4-14	50,0	38,0	76,0	94,50
1232510	16	25,0	1"	25,0	100,0	BSPP	1-11	60,0	48,0	92,0	113,50

BSPP connection according to DIN 3852-2-X.

LOCKABLE TYPE - POPPET SLK

Male coupling - Female thread

Item Code				WP Conn.	BP Disconn.	Thread 1	F1	D1	CH	L1	L
	Dash	mm	inch	MPa	MPa			mm	mm	mm	mm
1232511	04	6,0	1/4"	45,0	180,0	BSPP	1/4-19	11,9	19,0	48,5	82,00
1232512	06	10,0	3/8"	35,0	140,0	BSPP	3/8-19	19,9	22,0	38,0	76,50
1232513	08	13,0	1/2"	30,0	120,0	BSPP	1/2-14	24,7	27,0	42,5	85,50
1232514	12	19,0	3/4"	28,0	112,0	BSPP	3/4-14	32,7	36,0	47,0	94,50
1232515	16	25,0	1"	25,0	100,0	BSPP	1-11	40,9	45,0	56,5	113,50

BSPP connection according to DIN 3852-2-X.

Design and dimensions shown may be changed without prior notice

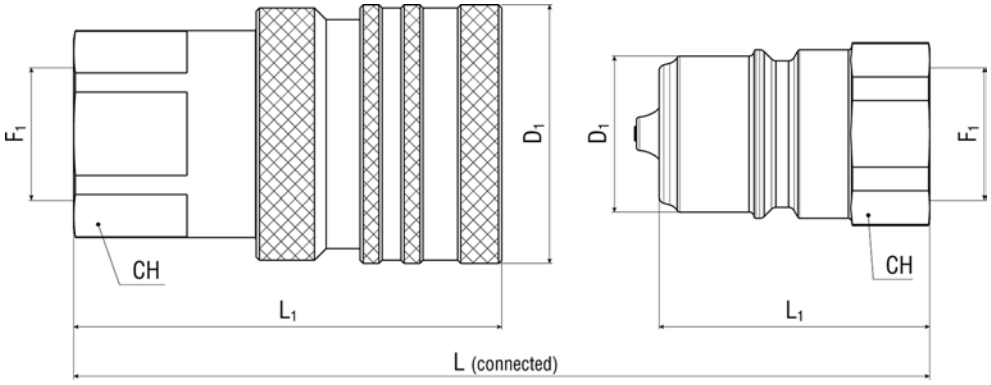

LOCKABLE TYPE PRESSURE ELIMINATION SYSTEM - POPPET SLK

Female coupling - Female thread

Item Code				WP Conn.	BP Disconn.	Thread 1	F1	D1	CH	L1	L
	Dash	mm	inch	MPa	MPa			mm	mm	mm	mm
1233056	06	10,0	3/8"	35,0	140,0	BSPP	3/8-19	34,0	25,0	61,5	76,50
1233057	08	13,0	1/2"	30,0	120,0	BSPP	1/2-14	40,0	30,0	67,5	85,50
1233058	12	19,0	3/4"	28,0	112,0	BSPP	3/4-14	50,0	38,0	76,0	94,50
1233059	16	25,0	1"	25,0	100,0	BSPP	1-11	60,0	48,0	92,0	113,50

BSPP connection according to DIN 3852-2-X.

LOCKABLE TYPE PRESSURE ELIMINATION SYSTEM - POPPET SLK

Male coupling - Female thread

Item Code				WP Conn.	BP Disconn.	Thread 1	F1	D1	CH	L1	L
	Dash	mm	inch	MPa	MPa			mm	mm	mm	mm
1233061	06	10,0	3/8"	35,0	140,0	BSPP	3/8-19	19,9	22,0	38,0	76,50
1233062	08	13,0	1/2"	30,0	120,0	BSPP	1/2-14	24,7	27,0	42,5	85,50
1233063	12	19,0	3/4"	28,0	112,0	BSPP	3/4-14	32,7	36,0	47,0	94,50
1233064	16	25,0	1"	25,0	100,0	BSPP	1-11	40,9	45,0	56,5	113,50

BSPP connection according to DIN 3852-2-X.

Design and dimensions shown may be changed without prior notice

// SVK-1H-ISO-A

POPPET STANDARD ISO 7241 A

TOP COAT

DN 6 to 25

to max WP 400 bar

// Quick and simple coupling and uncoupling
// One-hand push pull operation
// Break-away function
// Low pressure drop

General features: ARGUS SVK-1H-ISO-A quick release couplings are used for quick coupling and uncoupling of loaded lines. During the coupling action in zero or low-pressure ranges, valves that release or block the flow are automatically activated. The SVK-1H-ISO-A quick release coupling, formed by the coupling plug and the coupling socket, is coupled by pushing on a sleeve. This guarantees a flush connection between the two coupling halves. The sleeve is designed so that it has only to be moved in the relevant direction for disconnecting or connecting of coupling halves. SVK-1H-ISO-A quick release couplings can be used as pull-off couplings by panel mounting the sleeve bush.

Materials: galvanised steel with hardened parts subject to wear - HNBR O-rings (other materials optional) - Galvanised steel threaded adapters for various connection types - Thermoplastic dust cap and dust plug (see SVK-ISO-A). Top Coat Cr-III zinc plating with additional trivalent passivation for outstanding surface protection.

Application: suitable for liquid lines with mineral oil-based hydraulic fluids to DIN 51524 T1+T2. Also available for flame-resistant hydraulic fluids to VDMA 24317, for pneumatic and water hydraulics in appropriate materials on request.

Norm:
ISO 7241 A
ISO 5675
SAE J 1036

Temperature range:
-30 °C +125 °C

Note: other sizes and connection types available on request. Specific instructions for installation, use and maintenance are separately provided.

Design and dimensions shown may be changed without prior notice

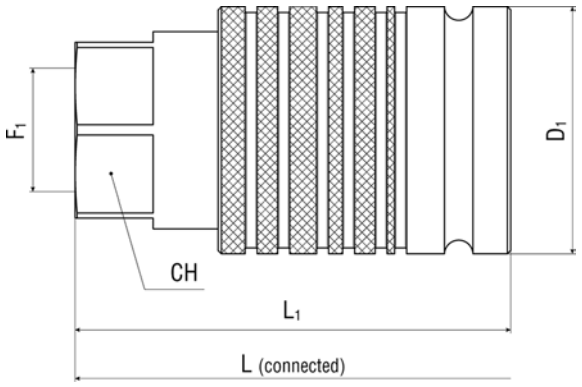

STANDARD ISO 7241 A PUSH PULL - POPPET SVK-1H-ISO-A

Female coupling - Female thread

Item Code				WP Conn.	BP Disconn.	Thread 1	F1	D1	CH	L1	L
	Dash	mm	inch	MPa	MPa			mm	mm	mm	mm
1233831	04	6,0	1/4"	40,0	160,0	BSPP	1/4-19	25,0	17,0	46,5	64,10
1233832	06	10,0	3/8"	40,0	160,0	BSPP	3/8-19	32,0	22,0	55,5	75,20
1234559	08	13,0	1/2"	25,0	100,0	BSPP	1/2-14	38,0	27,0	63,5	86,70
1233833	12	19,0	3/4"	25,0	100,0	BSPP	3/4-14	45,0	35,0	80,0	105,90
1233834	16	25,0	1"	25,0	100,0	BSPP	1-11	52,0	40,0	94,5	121,40
1233887	06	10,0	3/8"	40,0	160,0	MET	M16X1.5	32,0	22,0	54,0	73,20
1234562	08	13,0	1/2"	25,0	100,0	MET	M22X1.5	38,0	27,0	63,5	86,70
1233888	12	19,0	3/4"	25,0	100,0	MET	M30X1.5	45,0	35,0	77,0	99,40
1233879	04	6,0	1/4"	40,0	160,0	NPTF	1/4-18	25,0	17,0	48,0	67,10
1233880	06	10,0	3/8"	40,0	160,0	NPTF	3/8-18	32,0	22,0	55,5	75,20
1234560	08	13,0	1/2"	25,0	100,0	NPTF	1/2-14	38,0	27,0	63,5	86,70
1233881	12	19,0	3/4"	25,0	100,0	NPTF	3/4-14	45,0	35,0	80,0	105,90
1233882	16	25,0	1"	25,0	100,0	NPTF	1-11 1/2	52,0	40,0	94,5	121,40
1233883	04	6,0	1/4"	40,0	160,0	SAE-OB	7/16-20	25,0	17,0	46,5	64,10
1233884	06	10,0	3/8"	40,0	160,0	SAE-OB	3/4-16	32,0	24,0	57,5	79,20
1234561	08	13,0	1/2"	25,0	100,0	SAE-OB	3/4-16	38,0	27,0	63,5	86,70
1233885	12	19,0	3/4"	25,0	100,0	SAE-OB	1 1/16-12	45,0	35,0	82,5	110,90
1233886	16	25,0	1"	25,0	100,0	SAE-OB	1 5/16-12	52,0	40,0	94,5	121,40

BSPP connection according to DIN 3852-2-X, NPTF connection according to ANSI B1-20.3, metric connection according to DIN 3852, SAE UNF/UN connection according to SAE J 1926-1.

Design and dimensions shown may be changed without prior notice

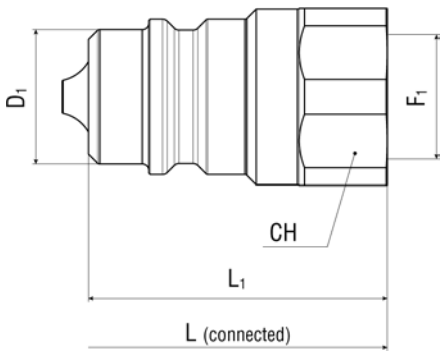

STANDARD ISO 7241 A PUSH PULL - POPPET SVK-1H-ISO-A

Male coupling - Female thread

Item Code				WP Conn.	BP Disconn.	Thread 1	F1	D1	CH	L1	L
	Dash	mm	inch	MPa	MPa			mm	mm	mm	mm
1233897	06	10,0	3/8"	40,0	160,0	MET	M16X1.5	17,3	22,0	36,0	73,20
1234566	08	13,0	1/2"	25,0	100,0	MET	M22X1.5	20,5	27,0	49,5	86,70
1233898	12	19,0	3/4"	25,0	100,0	MET	M30X1.5	29,1	35,0	49,5	99,40
1233893	04	6,0	1/4"	40,0	160,0	SAE-OB	7/16-20	11,8	19,0	32,0	64,10
1233894	06	10,0	3/8"	40,0	160,0	SAE-OB	3/4-16	17,3	24,0	39,5	79,20
1234565	08	13,0	1/2"	25,0	100,0	SAE-OB	3/4-16	20,5	27,0	49,5	86,70
1233895	12	19,0	3/4"	25,0	100,0	SAE-OB	1 1/16-12	29,1	35,0	55,5	110,90
1233896	16	25,0	1"	25,0	100,0	SAE-OB	1 5/16-12	34,3	40,0	60,5	121,30

BSPP connection according to DIN 3852-2-X, NPTF connection according to ANSI B1-20.3, metric connection according to DIN 3852, SAE UNF/UN connection according to SAE J 1926-1.

For BSPP and NPTF thread see product "Male coupling - Female thread" at page 10

Design and dimensions shown may be changed without prior notice

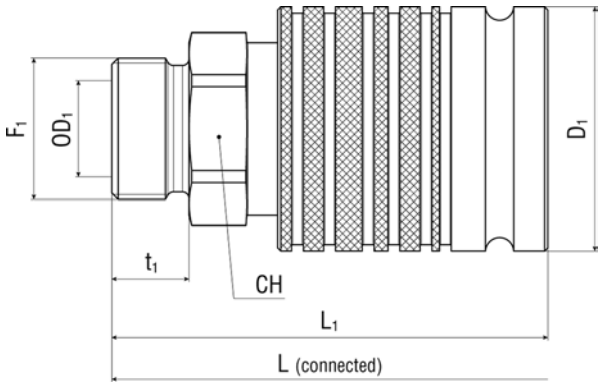

STANDARD ISO 7241 A PUSH PULL - POPPET SVK-1H-ISO-A

Female coupling - Metric 24° light/heavy series

Item Code				WP Conn.	BP Disconn.	Thread 1	F1	OD1	D1	t1	CH	L1	L
	Dash	mm	inch	MPa	MPa			mm	mm	mm	mm	mm	mm
1234843	04	6,0	1/4"	40,0	160,0	D24L	M12X1.5	6	25,0	10,0	19,0	52,0	84,60
1234644	04	6,0	1/4"	40,0	160,0	D24L	M14X1.5	8	25,0	10,0	19,0	52,0	84,60
1233900	06	10,0	3/8"	40,0	160,0	D24L	M14X1.5	8	32,0	10,0	22,0	58,0	89,70
1233901	06	10,0	3/8"	40,0	160,0	D24L	M16X1.5	10	32,0	11,0	22,0	59,0	91,70
1234844	08	13,0	1/2"	25,0	100,0	D24L	M14X1.5	8	38,0	10,0	27,0	65,8	100,10
1234646	08	13,0	1/2"	25,0	100,0	D24L	M16X1.5	10	38,0	11,0	27,0	66,8	102,10
1234649	08	13,0	1/2"	25,0	100,0	D24L	M18X1.5	12	38,0	11,0	27,0	66,8	102,10
1234655	08	13,0	1/2"	25,0	100,0	D24L	M22X1.5	15	38,0	12,0	27,0	67,8	104,10
1234845	08	13,0	1/2"	25,0	100,0	D24L	M26X1.5	18	38,0	12,0	32,0	67,8	104,10
1234846	12	19,0	3/4"	25,0	100,0	D24L	M18X1.5	12	45,0	11,0	36,0	80,0	117,90
1233902	12	19,0	3/4"	25,0	100,0	D24L	M22X1.5	15	45,0	12,0	36,0	81,0	119,90
1233903	12	19,0	3/4"	25,0	100,0	D24L	M26X1.5	18	45,0	12,0	36,0	81,0	119,90
1233904	12	19,0	3/4"	25,0	100,0	D24L	M30X2	22	45,0	14,0	36,0	83,0	123,90
1234847	16	25,0	1"	20,0	80,0	D24L	M26X1.5	18	52,0	12,0	41,0	94,0	137,40
1234656	16	25,0	1"	20,0	80,0	D24L	M30X2	22	52,0	14,0	41,0	96,0	141,40
1234848	16	25,0	1"	20,0	80,0	D24L	M36X2	28	52,0	14,0	41,0	96,0	141,40
1234849	16	25,0	1"	20,0	80,0	D24L	M45X2	35	52,0	16,0	50,0	98,0	145,40
1233911	06	10,0	3/8"	40,0	160,0	D24S	M16X1.5	8	32,0	12,0	22,0	51,5	93,70
1233912	06	10,0	3/8"	40,0	160,0	D24S	M18X1.5	10	32,0	12,0	22,0	51,5	93,70
1233913	06	10,0	3/8"	40,0	160,0	D24S	M20X1.5	12	32,0	12,0	22,0	51,5	93,70
1234850	08	13,0	1/2"	25,0	100,0	D24S	M18X1.5	10	38,0	12,0	27,0	67,8	104,10
1234667	08	13,0	1/2"	25,0	100,0	D24S	M20X1.5	12	38,0	12,0	27,0	67,8	104,10
1234668	08	13,0	1/2"	25,0	100,0	D24S	M22X1.5	14	38,0	12,0	27,0	67,8	104,10
1234669	08	13,0	1/2"	25,0	100,0	D24S	M24X1.5	16	38,0	14,0	27,0	69,8	108,10
1233914	12	19,0	3/4"	25,0	100,0	D24S	M24X1.5	16	45,0	14,0	36,0	83,0	123,90
1233915	12	19,0	3/4"	25,0	100,0	D24S	M30X2	20	45,0	16,0	36,0	85,0	127,90
1233916	12	19,0	3/4"	25,0	100,0	D24S	M36X2	25	45,0	18,0	36,0	87,0	131,90
1234851	16	25,0	1"	20,0	80,0	D24S	M30X2	20	52,0	16,0	45,0	98,0	145,40
1234670	16	25,0	1"	20,0	80,0	D24S	M36X2	25	52,0	18,0	45,0	100,0	149,40
1234852	16	25,0	1"	20,0	80,0	D24S	M42X2	30	52,0	20,0	46,0	102,0	153,40
1234853	16	25,0	1"	20,0	80,0	D24S	M52X2	38	52,0	22,0	55,0	104,0	157,40

Metric connection according to DIN EN ISO 8434-1.

Design and dimensions shown may be changed without prior notice

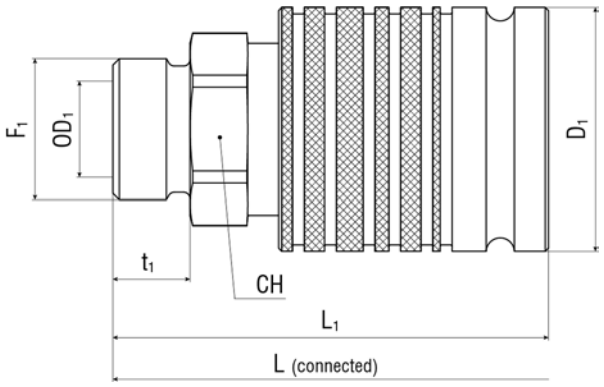

STANDARD ISO 7241 A PUSH PULL - POPPET SVK-1H-ISO-A

Female coupling - Male thread

Item Code				WP Conn.	BP Disconn.	Thread 1	F1	OD1	D1	t1	CH	L1	L
	Dash	mm	inch	MPa	MPa			mm	mm	mm	mm	mm	mm
1234791	08	13,0	1/2"	25,0	100,0	MET	M22X1.5	12	38,0	11,0	27,0	66,8	102,10

Design and dimensions shown may be changed without prior notice

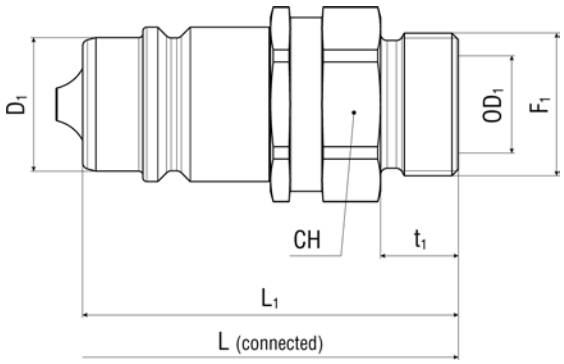

STANDARD ISO 7241 A PUSH PULL - POPPET SVK-1H-ISO-A

Male coupling - Metric 24° light/heavy series

Item Code				WP Conn.	BP Disconn.	Thread 1	F1	OD1	D1	t1	CH	L1	L
	Dash	mm	inch	MPa	MPa			mm	mm	mm	mm	mm	mm
1234832	04	6,0	1/4"	40,0	160,0	D24L	M12X1.5	6	11,9	10,0	19,0	47,0	84,60
1234657	04	6,0	1/4"	40,0	160,0	D24L	M14X1.5	8	11,9	10,0	19,0	47,0	84,60
1234658	06	10,0	3/8"	40,0	160,0	D24L	M14X1.5	8	17,3	10,0	22,0	49,5	89,70
1234659	06	10,0	3/8"	40,0	160,0	D24L	M16X1.5	10	17,3	11,0	22,0	50,5	91,70
1234833	08	13,0	1/2"	25,0	100,0	D24L	M14X1.5	8	20,6	10,0	27,0	56,0	100,10
1234660	08	13,0	1/2"	25,0	100,0	D24L	M16X1.5	10	20,6	11,0	27,0	57,0	102,10
1234661	08	13,0	1/2"	25,0	100,0	D24L	M18X1.5	12	20,6	11,0	27,0	57,0	102,10
1234662	08	13,0	1/2"	25,0	100,0	D24L	M22X1.5	15	20,6	12,0	27,0	58,0	104,10
1234834	08	13,0	1/2"	25,0	100,0	D24L	M26X1.5	18	20,6	12,0	32,0	58,0	104,10
1234835	12	19,0	3/4"	25,0	100,0	D24L	M18X1.5	12	29,1	11,0	36,0	65,0	117,90
1234663	12	19,0	3/4"	25,0	100,0	D24L	M22X1.5	15	29,1	12,0	36,0	66,0	119,90
1234664	12	19,0	3/4"	25,0	100,0	D24L	M26X1.5	18	29,1	12,0	36,0	66,0	119,90
1234665	12	19,0	3/4"	25,0	100,0	D24L	M30X2	22	29,1	14,0	36,0	68,0	123,90
1234836	16	25,0	1"	20,0	80,0	D24L	M26X1.5	18	34,3	12,0	41,0	77,0	137,40
1234666	16	25,0	1"	20,0	80,0	D24L	M30X2	22	34,3	14,0	41,0	79,0	141,40
1234837	16	25,0	1"	20,0	80,0	D24L	M36X2	28	34,3	14,0	41,0	79,0	141,40
1234838	16	25,0	1"	20,0	80,0	D24L	M45X2	35	34,3	16,0	50,0	81,0	145,40
1234671	06	10,0	3/8"	40,0	160,0	D24S	M16X1.5	8	17,3	12,0	22,0	51,5	93,70
1234672	06	10,0	3/8"	40,0	160,0	D24S	M18X1.5	10	17,3	12,0	22,0	51,5	93,70
1234673	06	10,0	3/8"	40,0	160,0	D24S	M20X1.5	12	17,3	12,0	22,0	51,5	93,70
1234839	08	13,0	1/2"	25,0	100,0	D24S	M18X1.5	10	20,6	12,0	27,0	58,0	104,10
1234674	08	13,0	1/2"	25,0	100,0	D24S	M20X1.5	12	20,6	12,0	27,0	58,0	104,10
1234675	08	13,0	1/2"	25,0	100,0	D24S	M22X1.5	14	20,6	12,0	27,0	58,0	104,10
1234676	08	13,0	1/2"	25,0	100,0	D24S	M24X1.5	16	20,6	14,0	27,0	60,0	108,10
1234677	12	19,0	3/4"	25,0	100,0	D24S	M24X1.5	16	29,1	14,0	36,0	68,0	123,90
1234678	12	19,0	3/4"	25,0	100,0	D24S	M30X2	20	29,1	16,0	36,0	70,0	125,90
1233923	12	19,0	3/4"	25,0	100,0	D24S	M36X2	25	29,1	18,0	36,0	72,0	131,90
1234679	16	25,0	1"	20,0	80,0	D24S	M36X2	25	34,3	18,0	45,0	83,0	149,40
1234841	16	25,0	1"	20,0	80,0	D24S	M42X2	30	34,3	20,0	46,0	85,0	153,40
1234842	16	25,0	1"	20,0	80,0	D24S	M52X2	38	34,3	22,0	55,0	87,0	157,40

Metric connection according to DIN EN ISO 8434-1.

Design and dimensions shown may be changed without prior notice

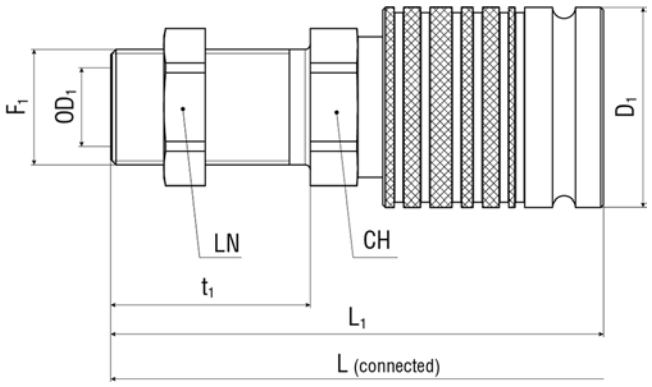

STANDARD ISO 7241 A PUSH PULL - POPPET SVK-1H-ISO-A

Female coupling - Metric 24° light/heavy series bulkhead

Item Code				WP Conn.	BP Disconn.	Thread 1	F1	OD1	D1	t1	CH	LN	L1	L
	Dash	mm	inch	MPa	MPa			mm	mm	mm	mm	mm	mm	mm
1234855	04	6,0	1/4"	40,0	160,0	D24L	M12X1.5	6	25,0	25,0	19,0	17,0	52,0	114,60
1234856	04	6,0	1/4"	40,0	160,0	D24L	M14X1.5	8	25,0	25,0	19,0	19,0	67,0	114,60
1234857	06	10,0	3/8"	40,0	160,0	D24L	M14X1.5	8	32,0	25,0	22,0	19,0	75,5	124,70
1234858	06	10,0	3/8"	40,0	160,0	D24L	M16X1.5	10	32,0	27,0	22,0	22,0	77,5	128,70
1234859	08	13,0	1/2"	25,0	100,0	D24L	M14X1.5	8	38,0	25,0	27,0	19,0	80,8	149,10
1234860	08	13,0	1/2"	25,0	100,0	D24L	M16X1.5	10	38,0	27,0	27,0	22,0	83,8	154,10
1234861	08	13,0	1/2"	25,0	100,0	D24L	M18X1.5	12	38,0	26,0	27,0	24,0	85,8	150,10
1234862	08	13,0	1/2"	25,0	100,0	D24L	M22X1.5	15	38,0	30,0	27,0	30,0	85,8	158,10
1234863	08	13,0	1/2"	25,0	100,0	D24L	M26X1.5	18	38,0	30,0	32,0	36,0	85,8	158,10
1234864	12	19,0	3/4"	25,0	100,0	D24L	M18X1.5	12	45,0	30,0	38,0	24,0	99,0	157,90
1234865	12	19,0	3/4"	25,0	100,0	D24L	M22X1.5	15	45,0	30,0	38,0	30,0	99,0	157,90
1234866	12	19,0	3/4"	25,0	100,0	D24L	M26X1.5	18	45,0	36,0	38,0	30,0	105,0	169,90
1234867	12	19,0	3/4"	25,0	100,0	D24L	M30X2	22	45,0	42,0	38,0	41,0	111,0	181,90
1234905	16	25,0	1"	20,0	80,0	D24L	M26X1.5	18	52,0	36,0	41,0	30,0	118,0	185,40
1234869	16	25,0	1"	20,0	80,0	D24L	M30X2	22	52,0	42,0	45,0	41,0	124,0	197,40
1234870	16	25,0	1"	20,0	80,0	D24L	M36X2	28	52,0	43,0	45,0	46,0	125,0	199,40
1234871	16	25,0	1"	20,0	80,0	D24L	M45X2	35	52,0	47,0	50,0	55,0	129,0	207,40
1235136	08	13,0	1/2"	25,0	100,0	D24S	M24X1.5	16	38,0	29,0	32,0	32,0	84,8	162,10

Design and dimensions shown may be changed without prior notice

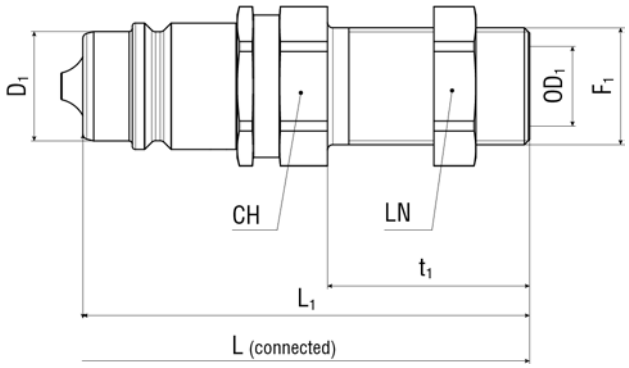

STANDARD ISO 7241 A PUSH PULL - POPPET SVK-1H-ISO-A

Male coupling - Metric 24° light series bulkhead

Item Code				WP Conn.	BP Disconn.	Thread 1	F1	OD1	D1	t1	CH	LN	L1	L
	Dash	mm	inch	MPa	MPa			mm	mm	mm	mm	mm	mm	mm
1234872	04	6,0	1/4"	40,0	160,0	D24L	M12X1.5	6	11,9	25,0	19,0	17,0	62,0	114,60
1234873	04	6,0	1/4"	40,0	160,0	D24L	M14X1.5	8	11,9	25,0	19,0	19,0	62,0	114,60
1234874	06	10,0	3/8"	40,0	160,0	D24L	M14X1.5	8	17,3	25,0	22,0	19,0	67,0	124,70
1234875	06	10,0	3/8"	40,0	160,0	D24L	M16X1.5	10	17,3	27,0	22,0	22,0	69,0	128,70
1234876	08	13,0	1/2"	25,0	100,0	D24L	M14X1.5	8	38,0	20,6	27,0	19,0	71,0	149,10
1234877	08	13,0	1/2"	25,0	100,0	D24L	M16X1.5	10	20,6	27,0	27,0	22,0	74,0	154,10
1234878	08	13,0	1/2"	25,0	100,0	D24L	M18X1.5	12	20,6	26,0	27,0	24,0	72,0	150,10
1234879	08	13,0	1/2"	25,0	100,0	D24L	M22X1.5	15	20,6	30,0	27,0	30,0	76,0	158,10
1234880	08	13,0	1/2"	25,0	100,0	D24L	M26X1.5	18	20,6	30,0	32,0	36,0	76,0	158,10
1234881	12	19,0	3/4"	25,0	100,0	D24L	M18X1.5	12	29,1	30,0	38,0	24,0	84,0	157,90
1234882	12	19,0	3/4"	25,0	100,0	D24L	M22X1.5	15	29,1	30,0	38,0	30,0	84,0	157,90
1234883	12	19,0	3/4"	25,0	100,0	D24L	M26X1.5	18	29,1	36,0	38,0	30,0	90,0	169,90
1234884	12	19,0	3/4"	25,0	100,0	D24L	M30X2	22	29,1	42,0	38,0	41,0	96,0	181,90
1234906	16	25,0	1"	20,0	80,0	D24L	M26X1.5	18	34,3	36,0	41,0	30,0	101,0	185,40
1234885	16	25,0	1"	20,0	80,0	D24L	M30X2	22	34,3	42,0	45,0	41,0	107,0	197,40
1234886	16	25,0	1"	20,0	80,0	D24L	M36X2	28	34,3	43,0	45,0	46,0	108,0	199,40
1234887	16	25,0	1"	20,0	80,0	D24L	M45X2	35	34,3	47,0	50,0	55,0	112,0	207,40

Metric connection according to DIN EN ISO 8434-1.

Design and dimensions shown may be changed without prior notice

// SVK-1H

POPPET STANDARD ISO 5675

TOP COAT

DN 8 to 19

to max WP 400 bar

// Quick and simple coupling and uncoupling
// One-hand push pull operation
// Break-away function
// Low pressure drop
// DN 12 compatible with ISO 7241-1-A

General features: ARGUS SVK-1H quick release couplings are used for quick coupling and uncoupling of hydraulic lines. During the coupling action in zero or low-pressure ranges, valves that release or block the flow are automatically activated. The SVK-1H quick release coupling, formed by the coupling plug and the coupling socket, is coupled by pushing on a sleeve. This guarantees a flush connection between the two coupling halves. The sleeve is designed so that it has only to be moved in the relevant direction for disconnecting or connecting of coupling halves. SVK-1H quick release couplings can be used as pull-off couplings by panel mounting the sleeve bush.

Materials: galvanised steel with hardened parts subject to wear - Brass valve stem guide - TPE poppet valve seal (PTFE optional) - HNBR O-rings (other materials optional) - Galvanised steel threaded adapters for various connection types - Polyethylene dust cap and dust plug. Top Coat Cr-III zinc plating with additional trivalent passivation for outstanding surface protection.

Application: suitable for liquid lines with mineral oil-based hydraulic fluids to DIN 51524 T1+T2. Also available for flame-resistant hydraulic fluids to VDMA 24317, for pneumatic and water hydraulics in appropriate materials on request.

Norm:
ISO 5675
SAE J 1036

Temperature range:
-30 °C +100 °C

Note: other sizes and connection types available on request. Specific instructions for installation, use and maintenance are separately provided.

Design and dimensions shown may be changed without prior notice

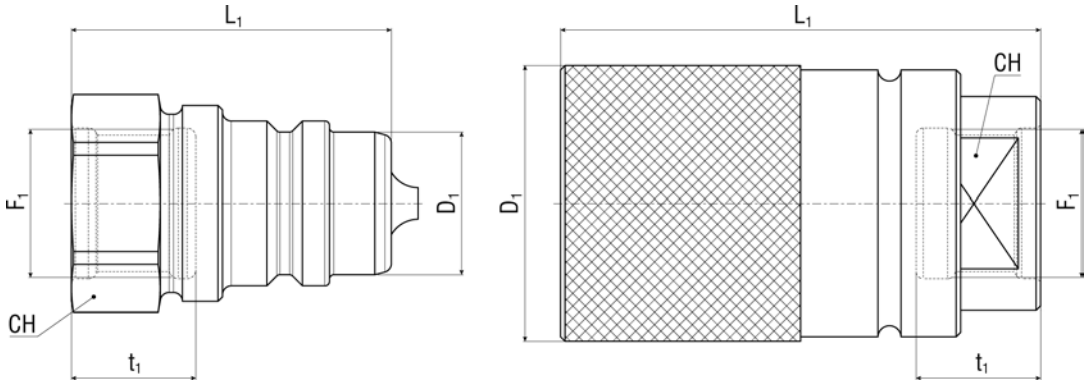

STANDARD ISO 5675 - POPPET SVK-1H

Female coupling - Female thread

Item Code				WP Conn.	Thread 1	F1	D1	t1	CH	L1
	Dash	mm	inch	MPa			mm	mm	mm	mm
1219634	05	8,0	5/16"	40,0	BSPP	3/8-19	32,0	9,0	19,0	54,0
1219632	08	13,0	1/2"	25,0	BSPP	1/2-14	39,0	16,0	27,0	63,0
1229069	12	19,0	3/4"	25,0	BSPP	1-11	51,0	18,0	36,0	88,5
1229089	05	8,0	5/16"	40,0	MET	M16X1.5	32,0	9,0	19,0	54,0
1229090	08	13,0	1/2"	25,0	MET	M22X1.5	39,0	16,0	27,0	63,0
1229091	12	19,0	3/4"	25,0	MET	M30X1.5	51,0	18,0	36,0	88,5

BSPP connection according to DIN 3852-2-X, NPTF connection according to ANSI B1-20.3, metric connection according to DIN 3852, SAE UNF/UN connection according to SAE J 1926-1.

STANDARD ISO 5675 - POPPET SVK-1H

Male coupling - Female thread

Item Code				WP Conn.	Thread 1	F1	D1	t1	CH	L1
	Dash	mm	inch	MPa			mm	mm	mm	mm
1219633	05	8,0	5/16"	40,0	BSPP	3/8-19	16,0	14,0	22,0	36,0
1219631	08	13,0	1/2"	25,0	BSPP	1/2-14	20,6	16,0	27,0	45,0
1229020	12	19,0	3/4"	25,0	BSPP	1-11	34,0	18,0	41,0	55,0
1229061	05	8,0	5/16"	40,0	MET	M16X1.5	16,0	14,0	22,0	36,0
1229062	08	13,0	1/2"	25,0	MET	M22X1.5	20,6	16,0	27,0	45,0
1229063	12	19,0	3/4"	25,0	MET	M30X1.5	34,0	18,0	41,0	55,0

BSPP connection according to DIN 3852-2-X, NPTF connection according to ANSI B1-20.3, metric connection according to DIN 3852, SAE UNF/UN connection according to SAE J 1926-1.

Design and dimensions shown may be changed without prior notice

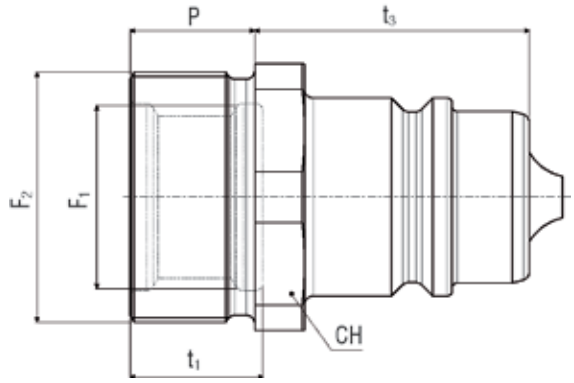

STANDARD ISO 5675 - POPPET SVK-1H

Male coupling - Internal/external thread panel mounting

Item Code				WP Conn.	Thread 1	F1	F2	t1	t3	CH	P
	Dash	mm	inch	MPa				mm	mm	mm	mm
1229058	05	8,0	5/16"	40,0	MET	M16X1.5	M26x1,5	14,0	36,0	27,0	15,0
1229059	08	13,0	1/2"	25,0	MET	M22X1.5	M30x1	16,0	33,0	32,0	15,0
1229060	12	19,0	3/4"	25,0	MET	M30X1.5	M45x1,5	18,0	55,0	46,0	28,0

Metric connection according to DIN 3852.

Design and dimensions shown may be changed without prior notice

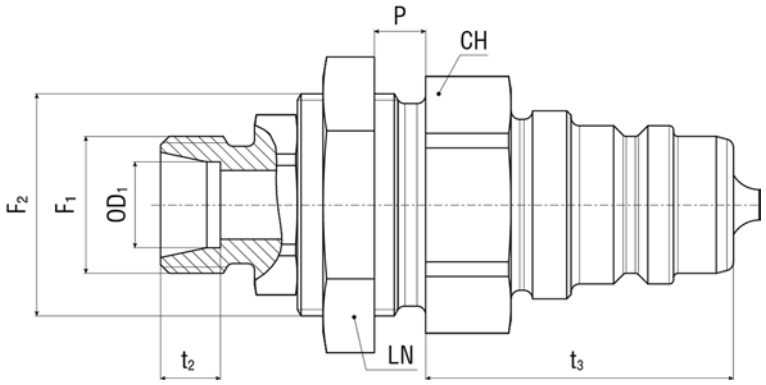

STANDARD ISO 5675 - POPPET SVK-1H

Male coupling - Metric 24° light/heavy series panel mounting

Item Code				WP Conn.	Thread 1	F1	F2	OD1	t2	t3	CH	LN	P
	Dash	mm	inch	MPa				mm	mm	mm	mm	mm	mm
1229022	05	8,0	5/16"	40,0	D24L	M12X1.5	M26x1,5	6	7,0	36,0	27,0	30,0	9,0
1229024	05	8,0	5/16"	40,0	D24L	M14X1.5	M26x1,5	8	7,0	36,0	27,0	30,0	9,0
1229026	05	8,0	5/16"	40,0	D24L	M16X1.5	M26x1,5	10	7,0	36,0	27,0	30,0	9,0
1229028	08	13,0	1/2"	25,0	D24L	M16X1.5	M30x1	10	7,0	33,0	32,0	36,0	9,0
1229030	08	13,0	1/2"	25,0	D24L	M18X1.5	M30x1	12	7,0	33,0	32,0	36,0	9,0
1229031	08	13,0	1/2"	25,0	D24L	M22X1.5	M30x1	15	7,0	33,0	32,0	36,0	9,0
1229034	12	19,0	3/4"	25,0	D24L	M22X1.5	M45x1,5	15	7,0	55,0	46,0	55,0	18,0
1229036	12	19,0	3/4"	25,0	D24L	M26X1.5	M45x1,5	18	7,5	55,0	46,0	55,0	18,0
1229037	12	19,0	3/4"	25,0	D24L	M30X2	M45x1,5	22	7,5	55,0	46,0	55,0	18,0
1229041	05	8,0	5/16"	40,0	D24S	M16X1.5	M26x1,5	8	7,0	36,0	27,0	30,0	9,0
1229043	05	8,0	5/16"	40,0	D24S	M18X1.5	M26x1,5	10	7,5	36,0	27,0	30,0	9,0
1229044	05	8,0	5/16"	40,0	D24S	M20X1.5	M26x1,5	12	7,5	36,0	27,0	30,0	9,0
1229047	08	13,0	1/2"	25,0	D24S	M20X1.5	M30x1	12	7,5	33,0	32,0	36,0	9,0
1229049	08	13,0	1/2"	25,0	D24S	M22X1.5	M30x1	14	8,0	33,0	32,0	36,0	9,0
1229050	08	13,0	1/2"	25,0	D24S	M24X1.5	M30x1	16	8,5	33,0	32,0	36,0	9,0
1229053	12	19,0	3/4"	25,0	D24S	M24X1.5	M45x1,5	16	8,5	55,0	46,0	55,0	18,0
1229054	12	19,0	3/4"	25,0	D24S	M30X2	M45x1,5	20	10,5	55,0	46,0	55,0	18,0
1229055	12	19,0	3/4"	25,0	D24S	M36X2	M45x1,5	25	12,0	55,0	46,0	55,0	18,0

Metric connection according to DIN EN ISO 8434-1.

Design and dimensions shown may be changed without prior notice

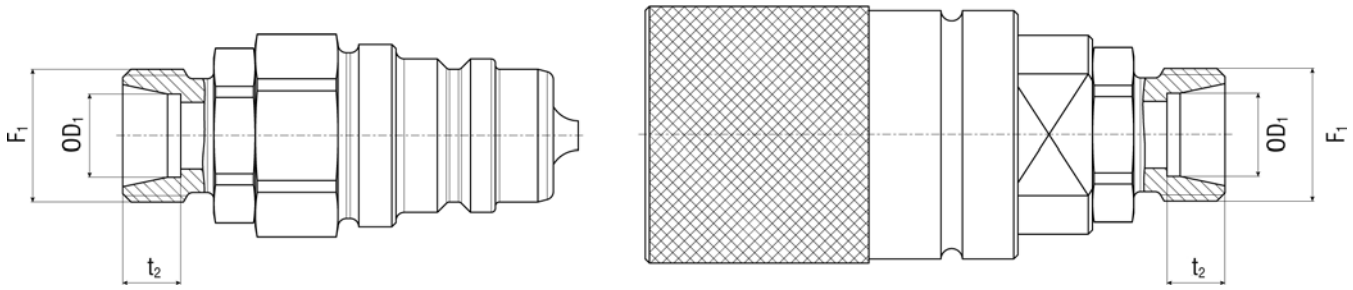

STANDARD ISO 5675 - POPPET SVK-1H

Female coupling - Metric 24° light series

Item Code				WP Conn.	Thread 1	F1	OD1	t2
	Dash	mm	inch	MPa			mm	mm
1229070	05	8,0	5/16"	40,0	D24L	M12X1.5	6	7,0
1229071	05	8,0	5/16"	40,0	D24L	M14X1.5	8	7,0
1229072	05	8,0	5/16"	40,0	D24L	M16X1.5	10	7,0
1229073	08	13,0	1/2"	25,0	D24L	M16X1.5	10	7,0
1229074	08	13,0	1/2"	25,0	D24L	M18X1.5	12	7,0
1229075	08	13,0	1/2"	25,0	D24L	M22X1.5	15	7,0
1229076	12	19,0	3/4"	25,0	D24L	M22X1.5	15	7,0
1229077	12	19,0	3/4"	25,0	D24L	M26X1.5	18	7,5
1229078	12	19,0	3/4"	25,0	D24L	M30X2	22	7,5

Metric connection according to DIN EN ISO 8434-1.

STANDARD ISO 5675 - POPPET SVK-1H

Male coupling - Metric 24° light series

Item Code				WP Conn.	Thread 1	F1	OD1	t2
	Dash	mm	inch	MPa			mm	mm
1229021	05	8,0	5/16"	40,0	D24L	M12X1.5	6	7,0
1229023	05	8,0	5/16"	40,0	D24L	M14X1.5	8	7,0
1229025	05	8,0	5/16"	40,0	D24L	M16X1.5	10	7,0
1229027	08	13,0	1/2"	25,0	D24L	M16X1.5	10	7,0
1229029	08	13,0	1/2"	25,0	D24L	M18X1.5	12	7,0
1229032	08	13,0	1/2"	25,0	D24L	M22X1.5	15	7,0
1229033	12	19,0	3/4"	25,0	D24L	M22X1.5	15	7,0
1229035	12	19,0	3/4"	25,0	D24L	M26X1.5	18	7,5
1229038	12	19,0	3/4"	25,0	D24L	M30X2	22	7,5

Metric connection according to DIN EN ISO 8434-1.

Design and dimensions shown may be changed without prior notice

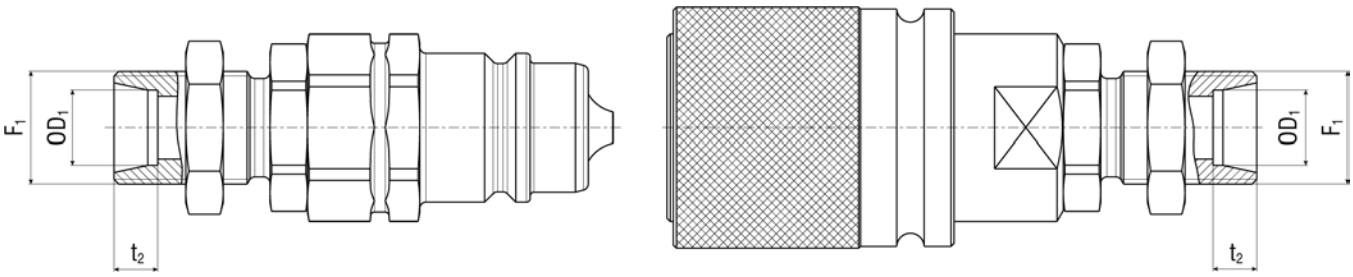

STANDARD ISO 5675 - POPPET SVK-1H

Female coupling - Metric 24° light series bulkhead

Item Code				WP Conn.	Thread 1	F1	OD1	t2
	Dash	mm	inch	MPa			mm	mm
1229079	08	13,0	1/2"	25,0	D24L	M18X1.5	12	7,0

Metric connection according to DIN EN ISO 8434-1.

STANDARD ISO 5675 - POPPET SVK-1H

Male coupling - Metric 24° light series bulkhead

Item Code				WP Conn.	Thread 1	F1	OD1	t2
	Dash	mm	inch	MPa			mm	mm
1229039	08	13,0	1/2"	25,0	D24L	M18X1.5	12	7,0

Metric connection according to DIN EN ISO 8434-1.

Design and dimensions shown may be changed without prior notice

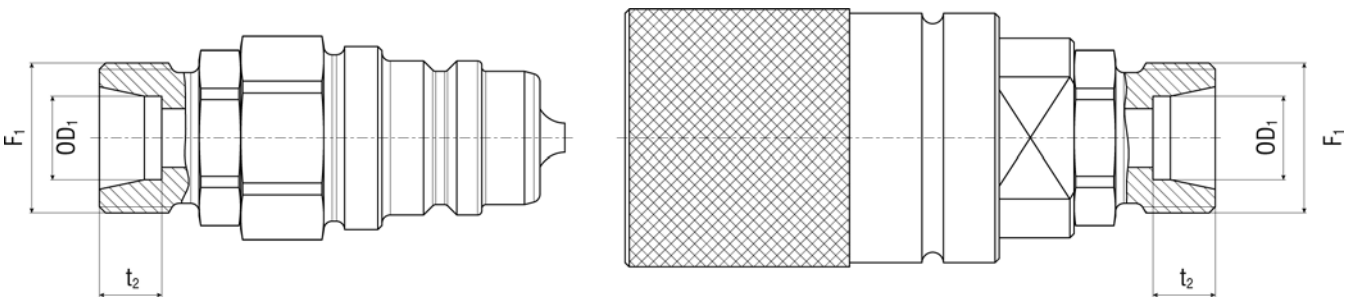

STANDARD ISO 5675 - POPPET SVK-1H

Female coupling - Metric 24° heavy series

Item Code				WP Conn.	Thread 1	F1	OD1	t2
	Dash	mm	inch	MPa			mm	mm
1229080	05	8,0	5/16"	40,0	D24S	M16X1.5	8	7,0
1229081	05	8,0	5/16"	40,0	D24S	M18X1.5	10	7,5
1229082	05	8,0	5/16"	40,0	D24S	M20X1.5	12	7,5
1229083	08	13,0	1/2"	25,0	D24S	M20X1.5	12	7,5
1229084	08	13,0	1/2"	25,0	D24S	M22X1.5	14	8,0
1229085	08	13,0	1/2"	25,0	D24S	M24X1.5	16	8,5
1229086	12	19,0	3/4"	25,0	D24S	M24X1.5	16	8,5
1229087	12	19,0	3/4"	25,0	D24S	M30X2	20	10,5
1229088	12	19,0	3/4"	25,0	D24S	M36X2	25	12,0

Metric connection according to DIN EN ISO 8434-1.

STANDARD ISO 5675 - POPPET SVK-1H

Male coupling - Metric 24° heavy series

Item Code				WP Conn.	Thread 1	F1	OD1	t2
	Dash	mm	inch	MPa			mm	mm
1229040	05	8,0	5/16"	40,0	D24S	M16X1.5	8	7,0
1229042	05	8,0	5/16"	40,0	D24S	M18X1.5	10	7,5
1229045	05	8,0	5/16"	40,0	D24S	M20X1.5	12	7,5
1229046	08	13,0	1/2"	25,0	D24S	M20X1.5	12	7,5
1229048	08	13,0	1/2"	25,0	D24S	M22X1.5	14	8,0
1229051	08	13,0	1/2"	25,0	D24S	M24X1.5	16	8,5
1229052	12	19,0	3/4"	25,0	D24S	M24X1.5	16	8,5
1229056	12	19,0	3/4"	25,0	D24S	M30X2	20	10,5
1229057	12	19,0	3/4"	25,0	D24S	M36X2	25	12,0

Metric connection according to DIN EN ISO 8434-1.

Design and dimensions shown may be changed without prior notice

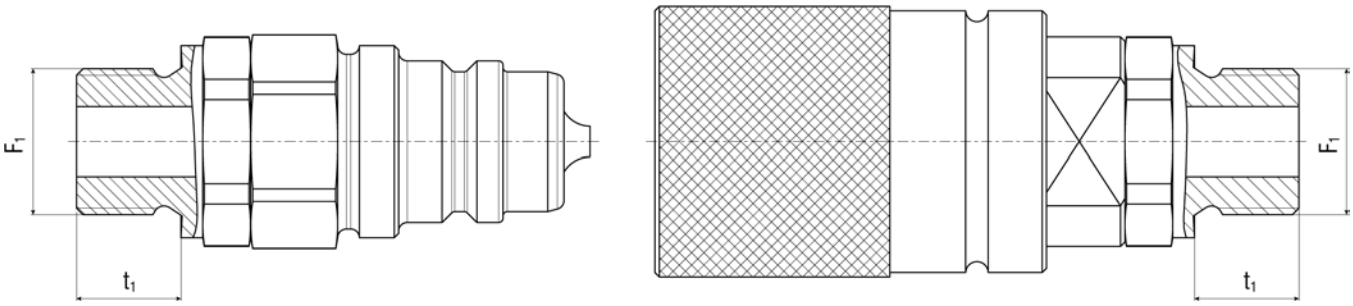

STANDARD ISO 5675 - POPPET SVK-1H

Female coupling - Male thread

Item Code				WP Conn.	Thread 1	F1	t1
	Dash	mm	inch	MPa			mm
1229064	05	8,0	5/16"	40,0	BSPP	1/4-19	12,0
1229065	05	8,0	5/16"	40,0	BSPP	3/8-19	12,0
1229066	08	13,0	1/2"	25,0	BSPP	1/2-14	14,0
1229068	12	19,0	3/4"	25,0	BSPP	3/4-14	16,0
1229067	12	19,0	3/4"	25,0	BSPP	1-11	18,0

AGF connection according to DIN 3901 heavy duty range with pipe thread G (BSPP), type A to DIN 3852-2.

STANDARD ISO 5675 - POPPET SVK-1H

Male coupling - Male thread

Item Code				WP Conn.	Thread 1	F1	t1
	Dash	mm	inch	MPa			mm
1229015	05	8,0	5/16"	40,0	BSPP	1/4-19	12,0
1229016	05	8,0	5/16"	40,0	BSPP	3/8-19	12,0
1229017	08	13,0	1/2"	25,0	BSPP	1/2-14	14,0
1229019	12	19,0	3/4"	25,0	BSPP	3/4-14	16,0
1229018	12	19,0	3/4"	25,0	BSPP	1-11	18,0

AGF connection according to DIN 3901 heavy duty range with pipe thread G (BSPP), type A to DIN 3852-2.

Design and dimensions shown may be changed without prior notice

STANDARD ISO 5675 - POPPET SVK-1H

Dust cap for male coupling

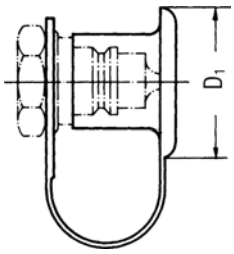

Item Code	Material				D1
		Dash	mm	inch	mm
1228896	PE	05	8,0	5/16"	45,0
1228891	PE	08	13,0	1/2"	50,0
1228893	PE	12	19,0	3/4"	65,0

STANDARD ISO 5675 - POPPET SVK-1H

Dust plug for female coupling

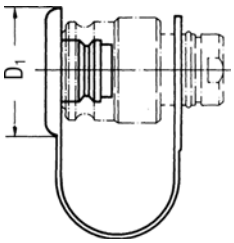

Item Code	Material				D1
		Dash	mm	inch	mm
1228903	PE	05	8,0	5/16"	45,0
1228898	PE	08	13,0	1/2"	50,0
1228900	PE	12	19,0	3/4"	65,0

STANDARD ISO 5675 - POPPET SVK-1H

Dust cap with clip for female coupling

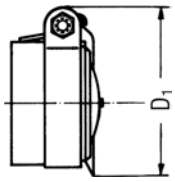

Item Code	Colour	Material				D1
			Dash	mm	inch	mm
1240270	BLK	PA-Nylon	08	13,0	1/2"	-
1234642	BLU	PE	08	13,0	1/2"	-
1219264	RED	PA-Nylon	08	13,0	1/2"	-

STANDARD ISO 5675 - POPPET SVK-1H

Dust cap with clip for female coupling and coloured disk

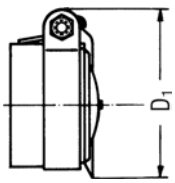

Item Code	Colour	Material				D1
			Dash	mm	inch	mm
1240274	BLK	PE	08	13,0	1/2"	-

Design and dimensions shown may be changed without prior notice

// PVK-RACING

POPPET

DN 8 to 13

WP 20 bar

- // **Base material aluminium**
- // **Break-away function**
- // **One-hand push pull operation**
- // **Low pressure drop**

General features: ARGUS PVK-Racing quick release couplings are used for quick coupling and uncoupling of fluid lines. During the coupling action in zero or low-pressure ranges, valves that release or block the flow are automatically activated. The PVK-Racing quick release coupling, formed by the coupling plug and the coupling socket, is coupled by pushing on a sleeve. This guarantees a flush connection between the two coupling halves. The sleeve is designed so that it has only to be moved in the relevant direction for disconnecting or connecting of coupling halves. PVK-Racing quick release couplings can be used as pull-off couplings by panel mounting the sleeve bush.

Materials: aluminium - Brass valve stem guide - TPE poppet valve seal (PTFE optional) - NBR O-rings (other materials optional) - Thermoplastic dust cap and dust plug.

Temperature range:
-30 °C +100 °C

Note: other sizes and connection types available on request. Specific instructions for installation, use and maintenance are separately provided.

Design and dimensions shown may be changed without prior notice

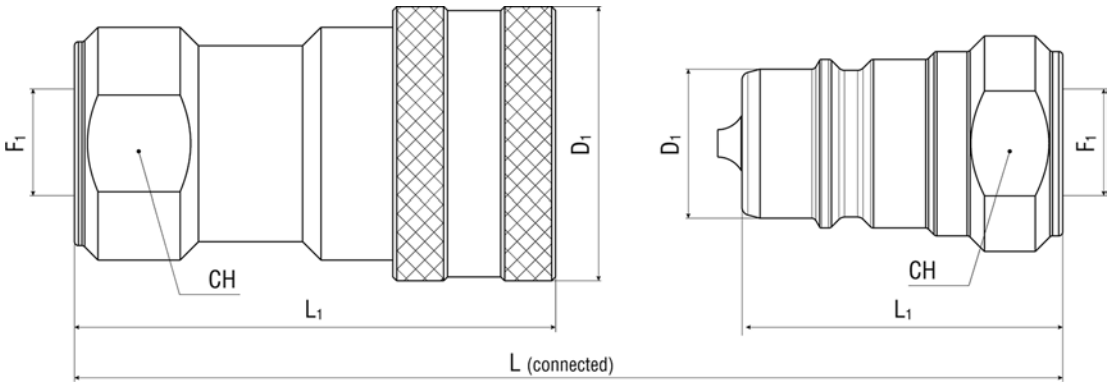

STANDARD ISO 7241 B - POPPET PVK-RACING

Female coupling - Female thread

Item Code				WP Conn.	BP Disconn.	Thread 1	F1	D1	CH	L1	L
	Dash	mm	inch	MPa	MPa			mm	mm	mm	mm
1237391	06	10,0	3/8"	2,0	-	BSPP	3/8-19	35,0	27,0	61,5	82,10

BSPP connection according to DIN 3852-2-X.

STANDARD ISO 7241 B - POPPET PVK-RACING

Male coupling - Female thread

Item Code				WP Conn.	BP Disconn.	Thread 1	F1	D1	CH	L1	L
	Dash	mm	inch	MPa	MPa			mm	mm	mm	mm
1237392	06	10,0	3/8"	2,0	-	BSPP	3/8-19	19,0	24,0	41,0	82,10

BSPP connection according to DIN 3852-2-X.

Design and dimensions shown may be changed without prior notice

// SPK-1H

POPPET STANDARD ISO 5675

TOP COAT

DN 13

WP 250 bar

- // **Connectable with male part under pressure**
- // **One-hand push pull operation**
- // **Break-away function**
- // **Low pressure drop**
- // **Compatible with ISO 7241-1-A**

General features: connectable under pressure ARGUS SPK-1H quick release couplings are not only for coupling to hydraulic auxiliary equipment under residual pressure, but they also prevent from unintentional closing through the intervening backflow effect (i.e. through quickly reducing loads). The double valve stroke required for the coupling to a pressurized plug is limited in the operating condition by a lock, which is not disengaged until decoupling occurs. This prevents any uncontrolled blocking of the hydraulic flow. The sleeve must be relieved during the coupling action. The pressurized cartridge valve is opened by applying pressure on the socket side.

Materials: materials, flow losses and temperatures are comparable to ARGUS SVK-1H quick release couplings. The two couplings can be interchanged, coupled and used as a pull-off coupling. For use with SVK-ISO-A or SVK-1H coupling plugs.

Application: suitable for liquid lines with mineral oil-based hydraulic fluids to DIN 51524 T1+T2. Also available for flame-resistant hydraulic fluids to VDMA 24317, for pneumatic and water hydraulics in appropriate materials on request.

Norm:
ISO 5675
SAE J 1036

Temperature range:
-30 °C +125 °C

Note: other sizes and connection types available on request. Specific instructions for installation, use and maintenance are separately provided.

Design and dimensions shown may be changed without prior notice

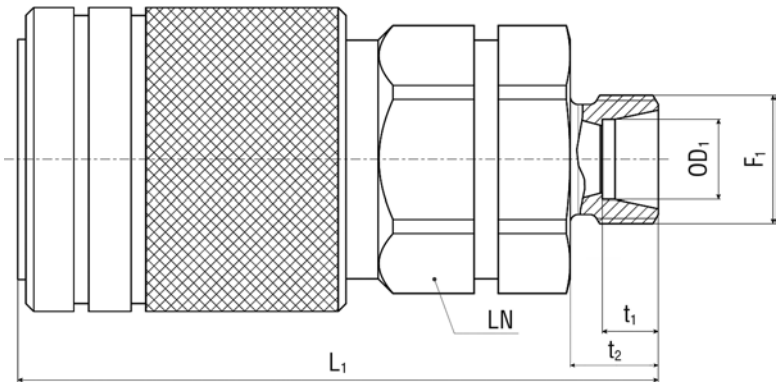

STANDARD ISO 5675 - POPPET SPK-1H

Female coupling - Metric 24° light series

Item Code				WP Conn.	Thread 1	F1	OD1	t1	t2	L1	LN
	Dash	mm	inch	MPa			mm	mm	mm	mm	mm
1229008	08	13,0	1/2"	25,0	D24L	M16X1.5	10	11,0	7,0	80,0	30,0
1229009	08	13,0	1/2"	25,0	D24L	M18X1.5	12	11,0	7,0	78,0	30,0
1229010	08	13,0	1/2"	25,0	D24L	M22X1.5	15	12,0	7,0	78,0	30,0

Metric connection according to DIN EN ISO 8434-1.

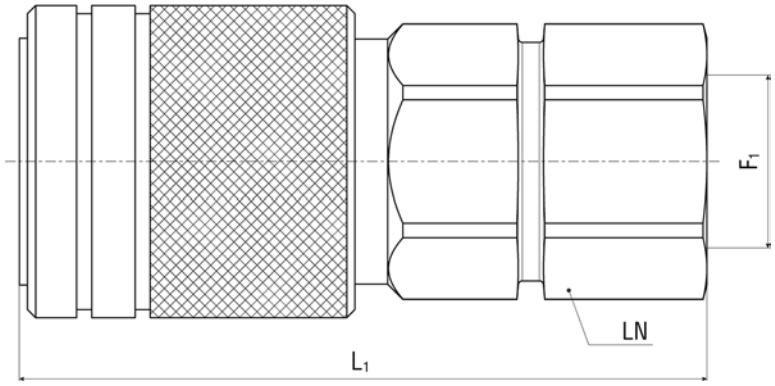

STANDARD ISO 5675 - POPPET SPK-1H

Female coupling - Female thread

Item Code				WP Conn.	Thread 1	F1	L1	LN
	Dash	mm	inch	MPa			mm	mm
1231470	08	13,0	1/2"	25,0	BSPP	1/2-14	84,0	30,0
1231473	08	13,0	1/2"	25,0	MET	M22X1.5	84,0	30,0
1231471	08	13,0	1/2"	25,0	NPTF	1/2-14	84,0	30,0
1231472	08	13,0	1/2"	25,0	SAE-OB	3/4-16	84,0	30,0

BSPP connection according to DIN 3852-2-X, NPTF connection according to ANSI B1-20.3, metric connection according to DIN 3852, SAE UNF/UN connection according to SAE J 1926-1.

Design and dimensions shown may be changed without prior notice

// SRK-1H

POPPET RIGID PIPES ISO 5675

TOP COAT

DN 13

WP 250 bar

// Connectable with male part under pressure
// One-shot connection under pressure
// One-hand push pull operation
// Break-away function
// Compatible with ISO 7241-1-A

General features: connectable under pressure ARGUS SRK-1H quick release couplings are specifically designed to be directly connected to rigid pipes or distributors.

Materials: galvanised steel with hardened parts subject to wear - Brass valve stem guide - TPE poppet valve seal (PTFE optional) - HNBR O-rings (other materials optional) - Thermoplastic dust cap and dust plug. Top Coat Cr-III zinc plating with additional trivalent passivation for outstanding surface protection.

Application: suitable for liquid lines with mineral oil-based hydraulic fluids to DIN 51524 T1+T2. Also available for flame-resistant hydraulic fluids to VDMA 24317, for pneumatic and water hydraulics in appropriate materials on request.

Norm: ISO 5675

Temperature range:
-30 °C +125 °C

Note: rated flow / pressure drop values on request.
Other sizes and connection types available on request.
Specific instructions for installation, use and maintenance are separately provided.

Design and dimensions shown may be changed without prior notice

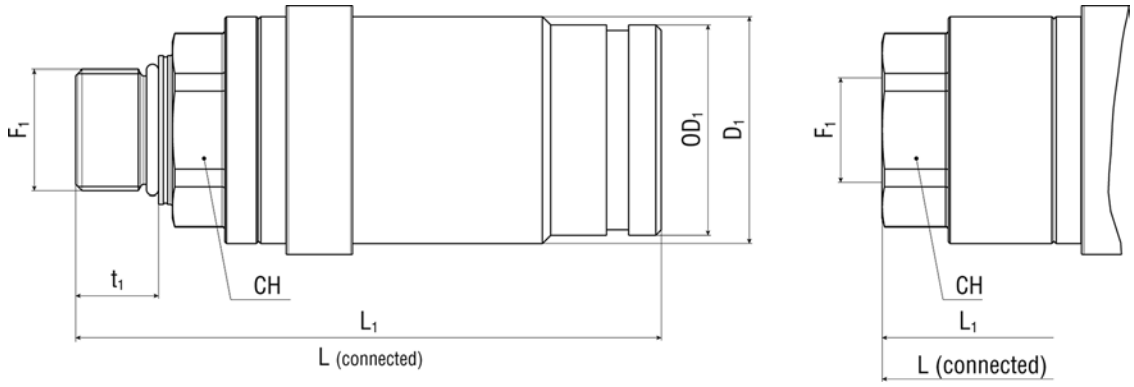

STANDARD ISO 5675 - POPPET SRK-1H

Female coupling - Male thread

Item Code				WP Conn.	BP Disconn.	Thread 1	F1	OD1	D1	t1	CH	L1	L
	Dash	mm	inch	MPa	MPa			mm	mm	mm	mm	mm	mm
1232324	08	13,0	1/2"	25,0	100,0	D24L	M22X1.5	38	41,0	15,0	32,0	106,0	142,20
1246328	08	13,0	1/2"	25,0	100,0	D24L	M22X1.5	38	38,0	15,0	32,0	109,5	145,70
1234641	08	13,0	1/2"	25,0	100,0	D24L	M18X1.5	38	41,0	14,0	32,0	105,0	141,20
1239799	08	13,0	1/2"	25,0	100,0	MET	M18X1.5	38	41,0	14,0	32,0	105,0	141,20

Metric connection according to ISO 6149-2 (DIN 3852).

STANDARD ISO 5675 - POPPET SRK-1H

Female coupling - Female thread

Item Code				WP Conn.	BP Disconn.	Thread 1	F1	D1	CH	L1	L
	Dash	mm	inch	MPa	MPa			mm	mm	mm	mm
1235028	08	13,0	1/2"	25,0	100,0	BSPP	1/2-14	41,0	32,0	104,0	140,20
1235029	08	13,0	1/2"	25,0	100,0	NPTF	1/2-14	41,0	32,0	103,0	139,20

BSPP connection according to DIN 3852-2-X, NPTF connection according to ANSI B1-20.3.

Design and dimensions shown may be changed without prior notice

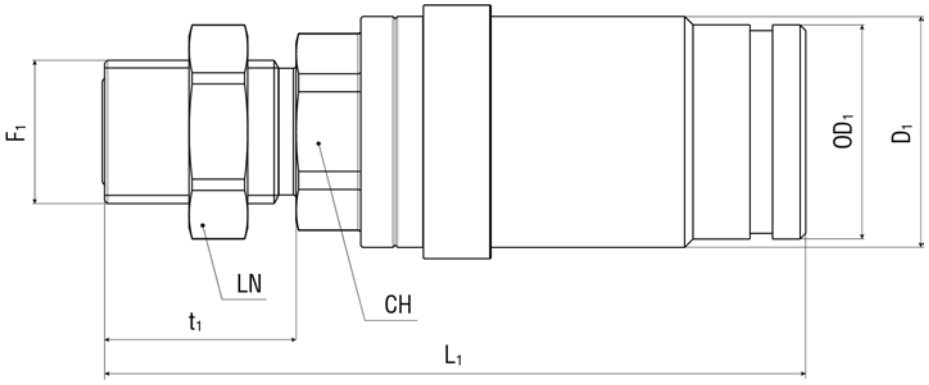

STANDARD ISO 5675 - POPPET SRK-1H

Female coupling - Bulkhead thread

Item Code				WP Conn.	BP Disconn.	Thread 1	F1	OD1	D1	t1	CH	LN	L1
	Dash	mm	inch	MPa	MPa			mm	mm	mm	mm	mm	mm
1236608	08	13,0	1/2"	25,0	100,0	ORFS	1-14	38	41,0	15,0	32,0	34,0	124,5

Metric connection according to ISO 6149-2 (DIN 3852).

Design and dimensions shown may be changed without prior notice

// SRK-1H PE PLUS

POPPET RIGID PIPES ISO 5675

TOP COAT

DN 13

WP 250 bar

- // Connectable with male part under pressure and female part under full pressure
- // No back drainage required
- // One-shot connection under pressure
- // One-hand push pull operation
- // Break-away function
- // Compatible with ISO 7241-1-A

General features: connectable under pressure ARGUS SRK-1H PLUS quick release couplings are specifically designed to be directly connected to rigid pipes or distributors.

Materials: galvanised steel with hardened parts subject to wear - Brass valve stem guide - TPE poppet valve seal (PTFE optional) - HNBR O-rings (other materials optional) - Thermoplastic dust cap and dust plug. Top Coat Cr-III zinc plating with additional trivalent passivation for outstanding surface protection.

Application: suitable for liquid lines with mineral oil-based hydraulic fluids to DIN 51524 T1+T2. Also available for flame-resistant hydraulic fluids to VDMA 24317, for pneumatic and water hydraulics in appropriate materials on request.

Norm: ISO 5675

Temperature range:
-30 °C +125 °C

Note: rated flow / pressure drop values on request
Other sizes and connection types available on request.
Specific instructions for installation, use and maintenance are separately provided.

Design and dimensions shown may be changed without prior notice

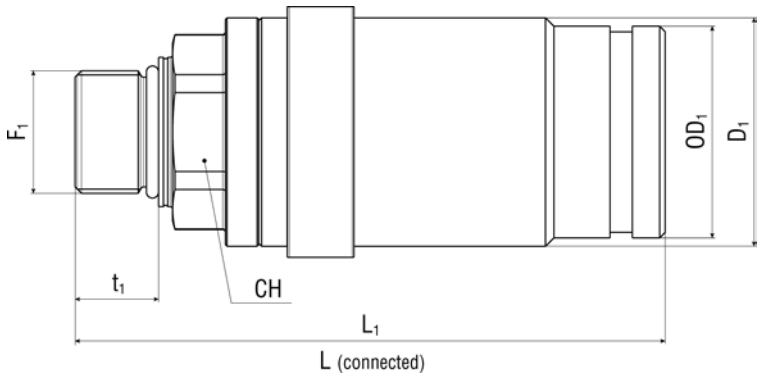

STANDARD ISO 5675 - POPPET SRK-1H PE PLUS

Female coupling - Male thread

Item Code				WP Conn.	BP Disconn.	Thread 1	F1	OD1	D1	t1	CH	L1	L
	Dash	mm	inch	MPa	MPa			mm	mm	mm	mm	mm	mm
1240276	08	13,0	1/2"	25,0	100,0	D24L	M22X1.5	38	41,0	15,0	32,0	124,5	-
1249340	08	13,0	1/2"	25,0	100,0	D24L	M22X1.5	38	38,0	15,0	32,0	109,5	145,70

Metric connection according to ISO 6149-2 (DIN 3852).

Design and dimensions shown may be changed without prior notice

// ACCESSORIES FOR SVK-1H, RV AND LBS

THREADED ADAPTERS

// Threaded adapters for types SVK-1H, RV and LBS

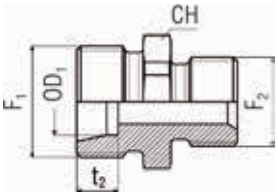

Item Code				OD1	Thread 1	F1	Thread 2	F2	t2	CH
	Dash	mm	inch	mm					mm	mm
1228860	05	8,0	5/16"	6	D24L	M12X1.5	MET	M16x1,5	7,0	19,0
1228862	05	8,0	5/16"	8	D24L	M14X1.5	MET	M16x1,5	7,0	19,0
1228863	05	8,0	5/16"	10	D24L	M16X1.5	MET	M16x1,5	7,0	19,0
1228842	08	13,0	1/2"	10	D24L	M16X1.5	MET	M22x1,5	7,0	24,0
1228843	08	13,0	1/2"	12	D24L	M18X1.5	MET	M22x1,5	7,0	24,0
1228845	08	13,0	1/2"	15	D24L	M22X1.5	MET	M22x1,5	7,0	24,0
1228851	12	19,0	3/4"	15	D24L	M22X1.5	MET	M30x1,5	7,0	32,0
1228853	12	19,0	3/4"	18	D24L	M26X1.5	MET	M30x1,5	7,5	32,0
1228854	12	19,0	3/4"	22	D24L	M30X2	MET	M30x1,5	7,5	32,0

Metric connection according to DIN EN ISO 8434-1.

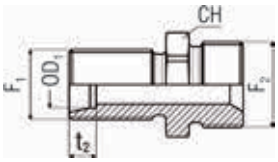

Item Code				OD1	Thread 1	F1	Thread 2	F2	t2	CH
	Dash	mm	inch	mm					mm	mm
1228861	08	13,0	1/2"	12	D24L	M18X1.5	MET	M22x1,5	7,0	24,0

Metric connection according to DIN EN ISO 8434-1.

Design and dimensions shown may be changed without prior notice

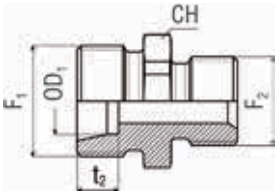

Item Code				OD1	Thread 1	F1	Thread 2	F2	t2	CH
	Dash	mm	inch	mm					mm	mm
1228864	05	8,0	5/16"	8	D24S	M16X1.5	MET	M16x1,5	7,0	19,0
1228865	05	8,0	5/16"	10	D24S	M18X1.5	MET	M16x1,5	7,5	19,0
1228866	05	8,0	5/16"	12	D24S	M20X1.5	MET	M16x1,5	7,5	22,0
1228844	08	13,0	1/2"	12	D24S	M20X1.5	MET	M22x1,5	7,5	24,0
1228846	08	13,0	1/2"	14	D24S	M22X1.5	MET	M22x1,5	8,0	24,0
1228847	08	13,0	1/2"	16	D24S	M24X1.5	MET	M22x1,5	8,5	24,0
1228852	12	19,0	3/4"	16	D24S	M24X1.5	MET	M30x1,5	8,5	32,0
1228855	12	19,0	3/4"	20	D24S	M30X2	MET	M30x1,5	10,5	32,0
1228856	12	19,0	3/4"	25	D24S	M36X2	MET	M30x1,5	12,0	36,0

Metric connection according to DIN EN ISO 8434-1.

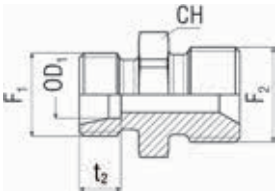

Item Code				Thread 1	F1	Thread 2	F2	t1	CH
	Dash	mm	inch					mm	mm
1228858	05	8,0	5/16"	BSPP	1/4-19	MET	M16x1,5	19,0	12,0
1228859	05	8,0	5/16"	BSPP	3/8-19	MET	M16x1,5	20,0	12,0
1228841	08	13,0	1/2"	BSPP	1/2-14	MET	M22x1,5	23,0	14,0
1228850	12	19,0	3/4"	BSPP	3/4-14	MET	M30x1,5	29,0	16,0
1228849	12	19,0	3/4"	BSPP	1-11	MET	M30x1,5	31,0	18,0

AGF connection according to DIN 3901 heavy duty range with pipe thread G (BSPP), type A to DIN 3852-2.

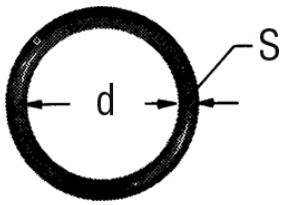

Item Code	Product Code	Material	Hardness	ID Gasket	T
			Sh-A	mm	mm
1904397	HN0J080H-120200	HNBR	80	12,00	2,00
1903607	HN0J0800-120200	NBR	80	12,00	2,00
1904398	HN0J080H-180200	HNBR	80	18,00	2,00
1903606	HN0J0800-180200	NBR	80	18,00	2,00
1903603	HN0J0800-260200	NBR	80	26,00	2,00
1904399	HN0J080H-260200	HNBR	80	26,00	2,00

NBR 80SH O-Rings.

Design and dimensions shown may be changed without prior notice

// QUICK RELEASE ADAPTER

TOP COAT

DN 13

WP 350 bar

// To easily adapt flat face to ISO A couplings

General features: ARGUS Quick Release Adapters provide an easy and reliable connection between female poppet ISO 7241 A and male flat face ISO 16028 couplings, or between female flat face ISO 16028 and male poppet ISO 7241 A couplings. This allows the user to adapt an already existing quick release part to a new type of connection.

Materials: housing and valves galvanised steel with hardened parts subject to wear. Seals HNBR (other materials on request) - backup rings PTFE - Thermoplastic dust cap and dust plug. Top Coat Cr-III zinc plating with additional trivalent passivation for outstanding surface protection.

Application: suitable for liquid lines with mineral oil-based hydraulic fluids to DIN 51524 T1+T2. Also available for flame-resistant hydraulic fluids to VDMA 24317, for pneumatic and water hydraulics in appropriate materials on request.

Temperature range:
-30 °C +125 °C

Note: other sizes and connection types available on request. Specific instructions for installation, use and maintenance are separately provided.

Design and dimensions shown may be changed without prior notice

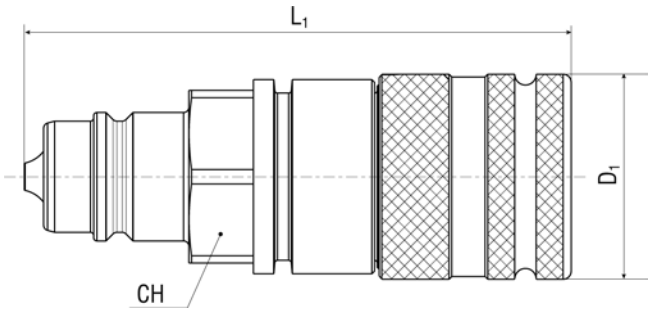

QUICK RELEASE ADAPTER - FLAT FACE - ISO A 1/2"

Female flat face ISO 16028 - Male poppet ISO 7241 A

Item Code				WP Conn.	BP Conn.	D1	CH	L1
	Dash	mm	inch	MPa	MPa	mm	mm	mm
1230322	08	13,0	1/2"	35,0	140,0	38,0	32,0	103,5

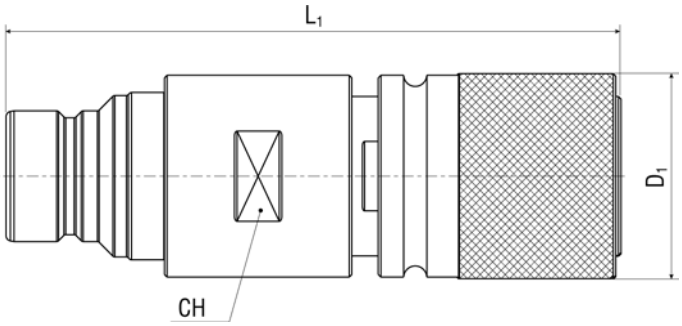

QUICK RELEASE ADAPTER - FLAT FACE - ISO A 1/2"

Male flat face ISO 16028 - Female poppet ISO 7241 A

Item Code				WP Conn.	BP Conn.	D1	CH	L1
	Dash	mm	inch	MPa	MPa	mm	mm	mm
1230323	08	13,0	1/2"	35,0	140,0	38,6	36,0	121,1

Design and dimensions shown may be changed without prior notice

// QUICK RELEASE ADAPTER

CONNCECTION UNDER PRESSURE

TOP COAT

PATENT PENDING

DN 13

WP 350 bar

// To easily adapt flat face to ISO A couplings
// Male flat face part connectable under pressure
// To make a standard ISO A coupling a flat face connectable under pressure

General features: Connectable under pressure ARGUS Quick Release Adapters provide an easy and reliable connection between female poppet ISO 7241 A and male flat face ISO 16028 couplings, or between female flat face ISO 16028 and male poppet ISO 7241 A couplings. This allows the user to adapt an already existing quick release part to a new type of connection.

Materials: housing and valves galvanised steel with hardened parts subject to wear. Seals HNBR (other materials on request) - backup rings PTFE - Thermoplastic dust cap and dust plug. Top Coat Cr-III zinc plating with additional trivalent passivation for outstanding surface protection.

Application: suitable for liquid lines with mineral oil-based hydraulic fluids to DIN 51524 T1+T2. Also available for flame-resistant hydraulic fluids to VDMA 24317, for pneumatic and water hydraulics in appropriate materials on request.

Temperature range:
-30 °C +125 °C

Note: other sizes and connection types available on request. Specific instructions for installation, use and maintenance are separately provided.

Design and dimensions shown may be changed without prior notice

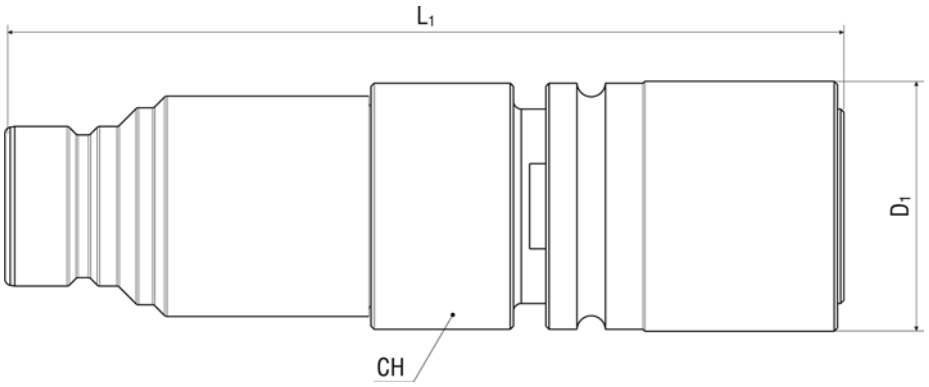

QUICK RELEASE ADAPTER - FLAT FACE - ISO A 1/2" CONNECTABLE UNDER PRESSURE

Male flat face ISO 16028 - Female poppet ISO 7241 A

Item Code				WP Conn.	BP Conn.	D1	CH	L1
	Dash	mm	inch	MPa	MPa	mm	mm	mm
1232286	08	13,0	1/2"	35,0	140,0	38,6	34,0	146,8

Design and dimensions shown may be changed without prior notice

// FPK

FLAT FACE STANDARD ISO 16028

TOP COAT

DN 6 to 25

WP 350 bar

// Flow performance optimized by CFD
// Low leak-oil rates, eco-friendly
// Robust, compact and lightweight
// Extended temperature range

General features: ARGUS FPK flat face quick release couplings are used for quick coupling and uncoupling of hydraulic lines. During the coupling action in zero or low-pressure ranges, valves that release or block the flow are automatically activated. The FPK flat face quick release coupling, formed by a coupling plug and a coupling socket, is coupled by pushing on a sleeve. This guarantees a flush connection between the two coupling halves. The sleeve is designed to be moved in the relevant direction for disconnecting or connecting the coupling halves. A safety system against accidental uncoupling is present on the female part.

Materials: galvanised steel with hardened parts subject to wear. HNBR seals (other materials on request) - Backup rings PTFE - Thermoplastic dust cap and dust plug. Top Coat Cr-III zinc plating with additional trivalent passivation for outstanding surface protection.

Application: suitable for liquid lines with mineral oil-based hydraulic fluids to DIN 51524 T1+T2. Also available for flame-resistant hydraulic fluids to VDMA 24317, for pneumatic and water hydraulics in appropriate materials on request.

Norm: ISO 16028

Temperature range:
-30 °C +125 °C

Note: other sizes and connection types available on request. Specific instructions for installation, use and maintenance are separately provided.

Design and dimensions shown may be changed without prior notice

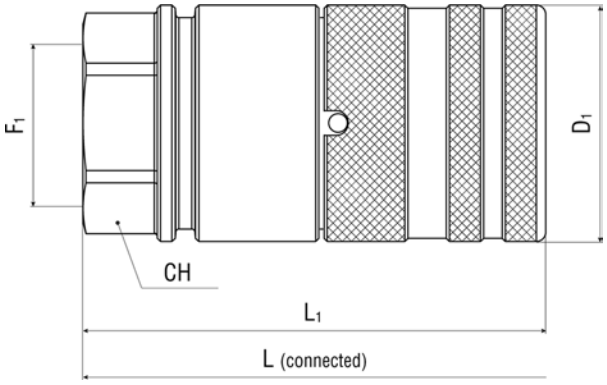

STANDARD ISO 16028 - FLAT FACE FPK

Female coupling - Female thread

Item Code				WP Conn.	BP Disconn.	Thread 1	F1	D1	CH	L1	L
	Dash	mm	inch	MPa	MPa			mm	mm	mm	mm
1229101	04	6,0	1/4"	35,0	140,0	BSPP	1/4-19	26,0	22,0	57,8	97,00
1229102	06	10,0	3/8"	35,0	140,0	BSPP	3/8-19	32,0	27,0	69,3	117,00
1224380	06	10,0	3/8"	35,0	140,0	BSPP	1/2-14	32,0	27,0	69,3	117,00
1229103	08	13,0	1/2"	35,0	140,0	BSPP	1/2-14	38,0	32,0	74,5	125,00
1224381	08	13,0	1/2"	35,0	140,0	BSPP	3/4-14	38,0	32,0	74,5	125,00
1232287	10	16,0	5/8"	35,0	140,0	BSPP	3/4-14	40,0	34,0	81,3	134,00
1229105	12	19,0	3/4"	35,0	140,0	BSPP	3/4-14	48,0	42,0	93,0	156,00
1224382	12	19,0	3/4"	35,0	140,0	BSPP	1-11	48,0	42,0	93,0	156,00
1229106	16	25,0	1"	35,0	140,0	BSPP	1 1/4-11	55,0	50,0	101,0	177,00
1231464	16	25,0	1"	35,0	140,0	BSPP	1-11	55,0	50,0	101,0	177,00
1231469	06	10,0	3/8"	35,0	140,0	MET	M22X1.5	32,0	27,0	69,3	117,00
1229213	04	6,0	1/4"	35,0	140,0	NPTF	1/4-18	26,0	22,0	57,8	97,00
1229215	06	10,0	3/8"	35,0	140,0	NPTF	1/2-14	32,0	27,0	69,3	117,00
1229214	06	10,0	3/8"	35,0	140,0	NPTF	3/8-18	32,0	27,0	69,3	117,00
1229217	08	13,0	1/2"	35,0	140,0	NPTF	3/4-14	38,0	32,0	74,5	125,00
1229216	08	13,0	1/2"	35,0	140,0	NPTF	1/2-14	38,0	32,0	74,5	125,00
1232382	10	16,0	5/8"	35,0	140,0	NPTF	3/4-14	40,0	34,0	81,3	134,00
1229219	12	19,0	3/4"	35,0	140,0	NPTF	3/4-14	48,0	42,0	93,0	156,00
1232460	12	19,0	3/4"	35,0	140,0	NPTF	1-11 1/2	48,0	42,0	93,0	156,00
1231467	16	25,0	1"	35,0	140,0	NPTF	1-11 1/2	55,0	50,0	101,0	177,00
1233075	16	25,0	1"	35,0	140,0	NPTF	1 1/4-11 1/2	55,0	50,0	101,0	177,00
1233978	04	6,0	1/4"	35,0	140,0	SAE-OB	7/16-20	26,0	22,0	57,8	97,00
1229236	06	10,0	3/8"	35,0	140,0	SAE-OB	9/16-18	32,0	27,0	71,3	119,00
1229238	08	13,0	1/2"	35,0	140,0	SAE-OB	3/4-16	38,0	32,0	74,5	125,00
1232384	10	16,0	5/8"	35,0	140,0	SAE-OB	1 1/16-12	40,0	34,0	90,3	153,00
1229241	12	19,0	3/4"	35,0	140,0	SAE-OB	1 1/16-12	48,0	42,0	107,3	185,30
1229243	16	25,0	1"	35,0	140,0	SAE-OB	1 5/16-12	55,0	50,0	107,3	185,30

BSPP connection according to DIN 3852-2-X, NPTF connection according to ANSI B1-20.3, metric connection according to ISO 6149-1, SAE UNF/UN connection according to SAE J 1926-1.

Design and dimensions shown may be changed without prior notice

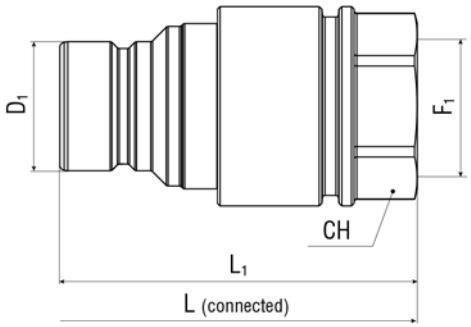

STANDARD ISO 16028 - FLAT FACE FPK

Male coupling - Female thread

Item Code				WP Conn.	BP Disconn.	Thread 1	F1	D1	CH	L1	L
	Dash	mm	inch	MPa	MPa			mm	mm	mm	mm
1229109	04	6,0	1/4"	35,0	140,0	BSPP	1/4-19	16,2	20,0	50,5	97,00
1229110	06	10,0	3/8"	35,0	140,0	BSPP	3/8-19	19,7	27,0	64,0	117,00
1229111	06	10,0	3/8"	35,0	140,0	BSPP	1/2-14	19,7	27,0	64,0	117,00
1229112	08	13,0	1/2"	35,0	140,0	BSPP	1/2-14	24,6	32,0	72,0	129,00
1224377	08	13,0	1/2"	35,0	140,0	BSPP	3/4-14	24,6	32,0	68,0	125,00
1232288	10	16,0	5/8"	35,0	140,0	BSPP	3/4-14	27,0	34,0	70,0	134,00
1229113	12	19,0	3/4"	35,0	140,0	BSPP	3/4-14	29,9	42,0	85,0	156,00
1224378	12	19,0	3/4"	35,0	140,0	BSPP	1-11	29,9	42,0	85,0	156,00
1231463	16	25,0	1"	35,0	140,0	BSPP	1-11	36,0	50,0	99,0	177,00
1229114	16	25,0	1"	35,0	140,0	BSPP	1 1/4-11	36,0	50,0	99,0	177,00
1231468	06	10,0	3/8"	35,0	140,0	MET	M22X1.5	19,7	27,0	64,0	117,00
1229224	04	6,0	1/4"	35,0	140,0	NPTF	1/4-18	16,2	20,0	50,5	97,00
1229226	06	10,0	3/8"	35,0	140,0	NPTF	1/2-14	19,7	27,0	64,0	117,00
1229225	06	10,0	3/8"	35,0	140,0	NPTF	3/8-18	19,7	27,0	64,0	117,00
1229227	08	13,0	1/2"	35,0	140,0	NPTF	1/2-14	24,6	32,0	68,0	125,00
1229228	08	13,0	1/2"	35,0	140,0	NPTF	3/4-14	24,6	32,0	68,0	125,00
1232383	10	16,0	5/8"	35,0	140,0	NPTF	3/4-14	27,0	34,0	70,0	134,00
1232461	12	19,0	3/4"	35,0	140,0	NPTF	1-11 1/2	29,9	42,0	85,0	156,00
1229230	12	19,0	3/4"	35,0	140,0	NPTF	3/4-14	29,9	42,0	85,0	156,00
1231466	16	25,0	1"	35,0	140,0	NPTF	1-11 1/2	36,0	50,0	99,0	177,00
1233076	16	25,0	1"	35,0	140,0	NPTF	1 1/4-11 1/2	36,0	50,0	99,0	177,00
1233980	04	6,0	1/4"	35,0	140,0	SAE-OB	7/16-20	16,2	20,0	50,5	97,00
1229247	06	10,0	3/8"	35,0	140,0	SAE-OB	9/16-18	19,7	27,0	64,0	119,00
1229249	08	13,0	1/2"	35,0	140,0	SAE-OB	3/4-16	24,6	32,0	72,0	125,00
1232385	10	16,0	5/8"	35,0	140,0	SAE-OB	1 1/16-12	27,0	34,0	80,0	153,00
1229252	12	19,0	3/4"	35,0	140,0	SAE-OB	1 1/16-12	29,9	42,0	87,0	164,50
1229254	16	25,0	1"	35,0	140,0	SAE-OB	1 5/16-12	36,0	50,0	99,0	185,30

BSPP connection according to DIN 3852-2-X, NPTF connection according to ANSI B1-20.3, metric connection according to ISO 6149-1, SAE UNF/UN connection according to SAE J 1926-1.

Design and dimensions shown may be changed without prior notice

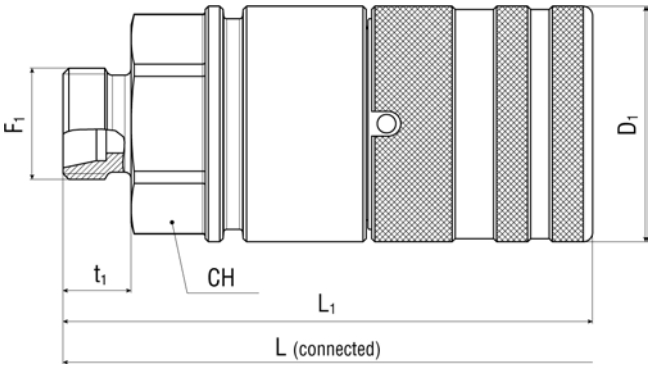

STANDARD ISO 16028 - FLAT FACE FPK

Female coupling - Metric 24° light/heavy series

Item Code				WP Conn.	BP Disconn.	Thread 1	F1	OD1	D1	t1	CH	L1	L
	Dash	mm	inch	MPa	MPa			mm	mm	mm	mm	mm	mm
1234726	04	6,0	1/4"	35,0	140,0	D24L	M14X1.5	8	26,0	10,0	22,0	67,7	117,20
1229118	06	10,0	3/8"	35,0	140,0	D24L	M16X1.5	10	32,0	11,0	27,0	82,3	141,40
1223449	06	10,0	3/8"	35,0	140,0	D24L	M18X1.5	12	32,0	11,0	27,0	82,3	141,40
1234030	06	10,0	3/8"	35,0	140,0	D24L	M22X1.5	15	32,0	12,0	27,0	83,3	143,40
1223438	08	13,0	1/2"	35,0	140,0	D24L	M18X1.5	12	38,0	11,0	32,0	85,6	151,20
1223440	08	13,0	1/2"	35,0	140,0	D24L	M22X1.5	15	38,0	12,0	32,0	86,6	153,20
1229120	12	19,0	3/4"	35,0	140,0	D24L	M26X1.5	18	48,0	12,0	42,0	105,5	180,50
1229121	12	19,0	3/4"	35,0	140,0	D24L	M30X2	22	48,0	14,0	42,0	107,5	184,50
1234031	16	25,0	1"	35,0	140,0	D24L	M30X2	22	55,0	14,0	50,0	118,3	208,20
1229122	16	25,0	1"	35,0	140,0	D24L	M36X2	28	55,0	14,0	50,0	118,3	208,20
1234032	04	6,0	1/4"	35,0	140,0	D24S	M16X1.5	8	26,0	12,0	22,0	69,7	121,20
1234033	06	10,0	3/8"	35,0	140,0	D24S	M20X1.5	12	32,0	12,0	27,0	83,3	143,40
1234034	06	10,0	3/8"	35,0	140,0	D24S	M22X1.5	14	32,0	14,0	27,0	85,3	147,40
1234035	06	10,0	3/8"	35,0	140,0	D24S	M24X1.5	16	32,0	14,0	27,0	85,3	147,40
1229153	08	13,0	1/2"	35,0	140,0	D24S	M22X1.5	14	38,0	14,0	32,0	88,6	157,20
1234036	08	13,0	1/2"	35,0	140,0	D24S	M24X1.5	16	38,0	14,0	32,0	88,6	157,20
1229156	12	19,0	3/4"	35,0	140,0	D24S	M30X2	20	48,0	16,0	42,0	109,5	188,50
1234037	12	19,0	3/4"	35,0	140,0	D24S	M36X2	25	48,0	18,0	42,0	111,5	192,50
1234038	12	19,0	3/4"	35,0	140,0	D24S	M42X2	30	48,0	20,0	46,0	113,5	196,50
1229157	16	25,0	1"	35,0	140,0	D24S	M36X2	25	55,0	18,0	50,0	122,3	216,20
1234039	16	25,0	1"	35,0	140,0	D24S	M42X2	30	56,0	20,0	50,0	124,3	224,20

Metric connection according to DIN EN ISO 8434-1.

Design and dimensions shown may be changed without prior notice

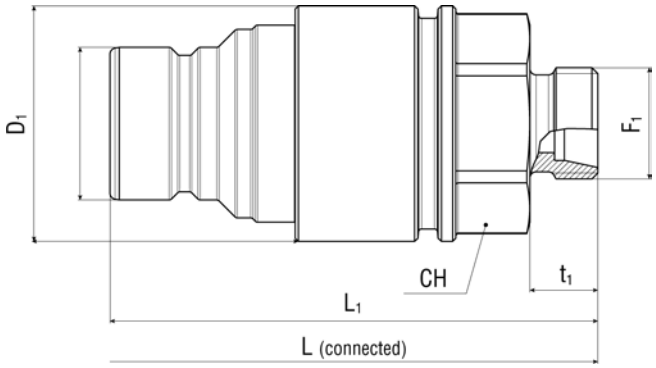

STANDARD ISO 16028 - FLAT FACE FPK

Male coupling - Metric 24° light/heavy series

Item Code				WP Conn.	BP Disconn.	Thread 1	F1	OD1	D1	t1	CH	L1	L
	Dash	mm	inch	MPa	MPa			mm	mm	mm	mm	mm	mm
1234727	04	6,0	1/4"	35,0	140,0	D24L	M14X1.5	8	16,2	10,0	22,0	60,5	117,20
1234728	06	10,0	3/8"	35,0	140,0	D24L	M16X1.5	10	19,7	11,0	27,0	75,0	141,40
1223471	06	10,0	3/8"	35,0	140,0	D24L	M18X1.5	12	19,7	11,0	27,0	75,0	141,40
1234040	06	10,0	3/8"	35,0	140,0	D24L	M22X1.5	15	19,7	12,0	27,0	76,0	143,40
1223453	08	13,0	1/2"	35,0	140,0	D24L	M18X1.5	12	24,6	11,0	32,0	83,0	151,20
1222555	08	13,0	1/2"	35,0	140,0	D24L	M22X1.5	15	24,6	12,0	32,0	84,0	153,20
1229128	12	19,0	3/4"	35,0	140,0	D24L	M26X1.5	18	29,9	12,0	42,0	97,0	180,50
1229129	12	19,0	3/4"	35,0	140,0	D24L	M30X2	22	29,9	14,0	42,0	99,0	184,50
1234041	16	25,0	1"	35,0	140,0	D24L	M30X2	22	36,0	14,0	50,0	113,0	208,20
1229130	16	25,0	1"	35,0	140,0	D24L	M36X2	28	36,0	14,0	50,0	113,0	208,20
1234042	04	6,0	1/4"	35,0	140,0	D24S	M16X1.5	8	16,2	12,0	22,0	62,5	121,20
1234043	06	10,0	3/8"	35,0	140,0	D24S	M20X1.5	12	19,7	12,0	27,0	76,0	143,40
1234044	06	10,0	3/8"	35,0	140,0	D24S	M22X1.5	14	19,7	14,0	27,0	78,0	147,40
1234045	06	10,0	3/8"	35,0	140,0	D24S	M24X1.5	16	19,7	14,0	27,0	78,0	147,40
1223461	08	13,0	1/2"	35,0	140,0	D24S	M22X1.5	14	24,6	14,0	32,0	86,0	157,20
1234046	08	13,0	1/2"	35,0	140,0	D24S	M24X1.5	16	24,6	14,0	32,0	82,0	157,20
1229166	12	19,0	3/4"	35,0	140,0	D24S	M30X2	20	29,9	16,0	42,0	101,0	188,50
1234047	12	19,0	3/4"	35,0	140,0	D24S	M36X2	25	29,9	18,0	42,0	103,0	192,50
1234048	12	19,0	3/4"	35,0	140,0	D24S	M42X2	30	29,9	20,0	46,0	105,0	196,50
1229167	16	25,0	1"	35,0	140,0	D24S	M36X2	25	36,0	18,0	50,0	117,0	216,20
1234049	16	25,0	1"	35,0	140,0	D24S	M42X2	30	36,0	20,0	50,0	119,0	224,20

Metric connection according to DIN EN ISO 8434-1.

Design and dimensions shown may be changed without prior notice

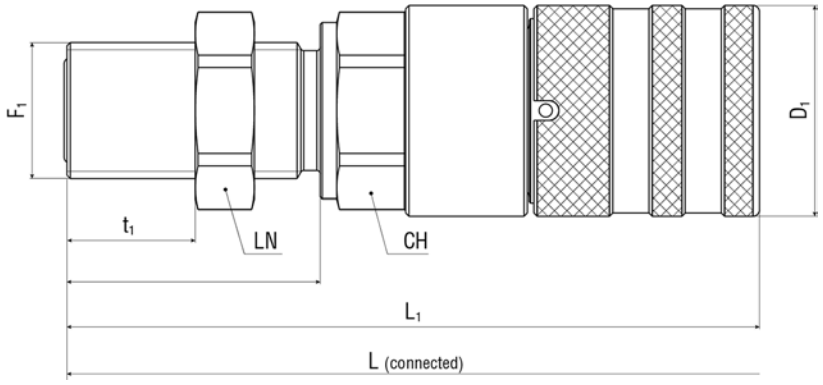

STANDARD ISO 16028 - FLAT FACE FPK

Female coupling - Bulkhead thread

Item Code				WP Conn.	BP Disconn.	Thread 1	F1	D1	t1	CH	LN	L1	L
	Dash	mm	inch	MPa	MPa			mm	mm	mm	mm	mm	mm
1234706	06	10,0	3/8"	35,0	140,0	ORFS	13/16-16	32,0	38,5	27,0	27,0	105,3	187,50
1239546	08	13,0	1/2"	35,0	140,0	ORFS	1-14	38,0	40,5	34,0	34,0	106,6	193,70

Design and dimensions shown may be changed without prior notice

STANDARD ISO 16028 - FLAT FACE FPK

Dust cap for female coupling

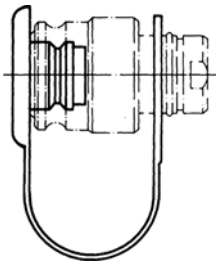

Item Code	Colour	Material			
			Dash	mm	inch
1224407	RED	PE	04	6,0	1/4"
1224408	RED	PE	06	10,0	3/8"
1224409	RED	PE	08	13,0	1/2"
1223544	RED	PE	10	16,0	5/8"
1223537	RED	PE	12	19,0	3/4"
1223539	RED	PE	16	25,0	1"

STANDARD ISO 16028 - FLAT FACE FPK

Dust cap for male coupling

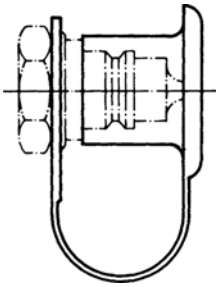

Item Code	Colour	Material			
			Dash	mm	inch
1223532	RED	PE	04	6,0	1/4"
1223536	RED	PE	06	10,0	3/8"
1223531	RED	PE	08	13,0	1/2"
1223535	RED	PE	10	16,0	5/8"
1223528	RED	PE	12	19,0	3/4"
1223530	RED	PE	16	25,0	1"

Design and dimensions shown may be changed without prior notice

// FPK-P

FLAT FACE STANDARD ISO 16028

TOP COAT

DN 10 to 19

WP 350 bar

// Connectable under pressure with patented system
// Low effort to connect under pressure
// Robust, compact and light weight
// Low leak-oil rates, eco-friendly
// Low pressure drop

General features: connectable under pressure ARGUS FPK-P flat face quick release couplings are used for quick coupling and uncoupling of hydraulic lines. During the coupling action in zero or low pressure ranges, valves that release or block the flow are automatically activated. The FPP flat face quick release coupling, formed by a coupling plug and a coupling socket, is coupled by pushing on a sleeve. This guarantees a flush connection between the two coupling halves. The sleeve is designed to be moved in the relevant direction for disconnecting or connecting the coupling halves.

Materials: galvanised steel with hardened parts subject to wear. HNBR seals (other materials on request) - backup rings PTFE - Thermoplastic dust cap and dust plug. Top Coat Cr-III zinc plating with additional trivalent passivation for outstanding surface protection.

Application: suitable for liquid lines with mineral oil-based hydraulic fluids to DIN 51524 T1+T2. Also available for flame-resistant hydraulic fluids to VDMA 24317, for pneumatic and water hydraulics in appropriate materials on request.

Norm: ISO 16028

Temperature range:
-30 °C +125 °C

Note: rated flow / pressure drop values on request.
Other sizes and connection types available on request.
Specific instructions for installation, use and maintenance are separately provided.

Design and dimensions shown may be changed without prior notice

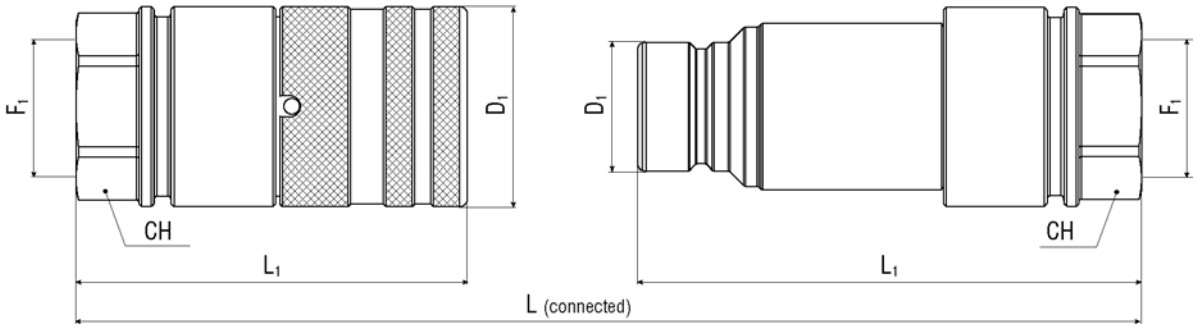

STANDARD ISO 16028 - FLAT FACE FPK-P CONNECTABLE UNDER PRESSURE

Female coupling - Female thread

Item Code				WP Conn.	BP Disconn.	Thread 1	F1	D1	CH	L1	L
	Dash	mm	inch	MPa	MPa			mm	mm	mm	mm
1234705	08	13,0	1/2"	35,0	140,0	BSPP	1/2-14	38,0	32,0	74,5	152,00

BSPP connection according to DIN 3852-2-X, NPTF connection according to ANSI B1-20.3.

STANDARD ISO 16028 - FLAT FACE FPK-P CONNECTABLE UNDER PRESSURE

Male coupling - Female thread

Item Code				WP Conn.	BP Disconn.	Thread 1	F1	D1	CH	L1	L
	Dash	mm	inch	MPa	MPa			mm	mm	mm	mm
1232283	06	10,0	3/8"	35,0	140,0	BSPP	3/8-19	19,7	27,0	82,5	134,00
1231474	08	13,0	1/2"	35,0	140,0	BSPP	1/2-14	24,6	32,0	94,5	152,00
1232284	12	19,0	3/4"	35,0	140,0	BSPP	3/4-14	29,9	42,0	118,5	189,50
1234990	06	10,0	3/8"	35,0	140,0	NPTF	3/8-18	19,7	27,0	82,5	134,00
1234991	08	13,0	1/2"	35,0	140,0	NPTF	1/2-14	24,6	32,0	94,5	152,00
1234992	12	19,0	3/4"	35,0	140,0	NPTF	3/4-14	29,9	42,0	118,5	189,50

BSPP connection according to DIN 3852-2-X, NPTF connection according to ANSI B1-20.3.

Design and dimensions shown may be changed without prior notice

// BK

BRAKE VALVE FLAT FACE STANDARD ISO 5676

TOP COAT

DN 10

WP 250 bar

// Coupling for brake system
// Low leak-oil rates, eco-friendly
// Low pressure drop
// Compatibility with other couplings in-use

General features: brake line couplings Argus BK are specifically designed for the use in hydraulic brake circuits of tractors. During the coupling actions, valves that release or block the flow, are automatically activated. The BK quick release coupling, formed from a coupling plug and a coupling socket, is coupled by pushing on a sleeve. This guarantees a flush connection between the two coupling halves. The sleeve is designed to be moved in the relevant direction for disconnecting or connecting the coupling halves.

Materials: galvanised steel with hardened parts subject to wear - HNBR O-rings (other materials optional) - Thermoplastic dust cap and dust plug. Top Coat Cr-III zinc plating with additional trivalent passivation for outstanding surface protection.

Application: suitable for liquid lines with mineral oil-based hydraulic fluids to DIN 51524 T1+T2. Also available for flame-resistant hydraulic fluids to VDMA 24317, for pneumatic and water hydraulics in appropriate materials on request.

Norm: ISO 5676

Temperature range:
-30 °C +125 °C

Note: rated flow / pressure drop values on request.
Other sizes and connection types available on request.
Specific instructions for installation, use and maintenance are separately provided.

Design and dimensions shown may be changed without prior notice

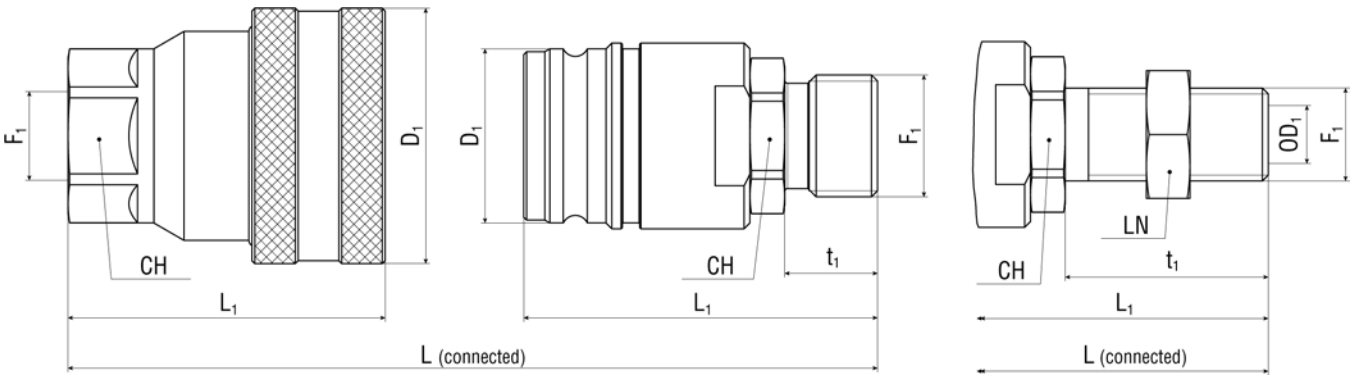

STANDARD ISO 5676 - BRAKE VALVE BK

Female coupling - Female thread

Item Code				WP Conn.	BP Disconn.	Thread 1	F1	D1	CH	L1
	Dash	mm	inch	MPa	MPa			mm	mm	mm
1219386	06	10,0	3/8"	25,0	100,0	BSPP	3/8-19	44,0	27,0	54,7
1219432	06	10,0	3/8"	25,0	100,0	BSPP	1/2-14	44,0	27,0	58,7
1233607	06	10,0	3/8"	25,0	100,0	MET	M18X1.5	44,0	27,0	50,7

BSPP connection according to DIN 3852-2-X, metric connection according to ISO 6149-1.

STANDARD ISO 5676 - BRAKE COUPLING BK

Male coupling - Male thread

Item Code				WP Conn.	BP Disconn.	Thread 1	F1	D1	t1	CH	L1
	Dash	mm	inch	MPa	MPa			mm	mm	mm	mm
1219429	06	10,0	3/8"	25,0	100,0	BSPP	1/2-14	30,0	16,0	24,0	61,0

BSPP connection according to DIN 3852-2-X.

STANDARD ISO 5676 - BRAKE COUPLING BK

Male coupling - Metric 24° light/heavy series bulkhead

Item Code				WP Conn.	BP Disconn.	Thread 1	F1	OD1	D1	t1	CH	LN	L1
	Dash	mm	inch	MPa	MPa			mm	mm	mm	mm	mm	mm
1219431	06	10,0	3/8"	25,0	100,0	D24L	M16X1.5	10	30,0	35,0	24,0	22,0	80,0
1233608	06	10,0	3/8"	25,0	100,0	D24L	M18X1.5	12	30,0	36,0	24,0	24,0	81,0
1219430	06	10,0	3/8"	25,0	100,0	D24L	M22X1.5	15	30,0	38,0	24,0	27,0	83,0
1233609	06	10,0	3/8"	25,0	100,0	D24S	M20X1.5	12	30,0	38,0	24,0	27,0	83,0

Metric connection according to DIN EN ISO 8434-1.

Design and dimensions shown may be changed without prior notice

// DK

DIAGNOSTIC FLAT FACE STANDARD ISO 15171-1

TOP COAT

DN 6

WP 470 bar

// Diagnostic coupling for pressure detection
// Low leak-oil rates, eco-friendly
// Low pressure drop
// Compatibility with other couplings in-use

General features: diagnostic couplings Argus DK are specifically designed for pressure detection in oleo-hydraulic circuits, allowing a quick connection/disconnection of the measuring equipment. During the coupling actions, valves that release or block the flow are automatically activated. The DK quick release coupling, formed from a coupling plug and a coupling socket, is coupled by pushing on a sleeve. This guarantees a flush connection between the two coupling halves. The sleeve is designed to be moved in the relevant direction for disconnecting or connecting the coupling halves.

Materials: galvanised steel with hardened parts subject to wear - HNBR O-rings (other materials optional) - Thermoplastic dust cap and dust plug. Top Coat Cr-III zinc plating with additional trivalent passivation for outstanding surface protection.

Application: suitable for liquid lines with mineral oil-based hydraulic fluids to DIN 51524 T1+T2. Also available for flame-resistant hydraulic fluids to VDMA 24317, for pneumatic and water hydraulics in appropriate materials on request.

Norm: ISO 15171-1

Temperature range:
-30 °C +125 °C

Note: rated flow / pressure drop values on request.
Other sizes and connection types available on request.
Specific instructions for installation, use and maintenance are separately provided.

Design and dimensions shown may be changed without prior notice

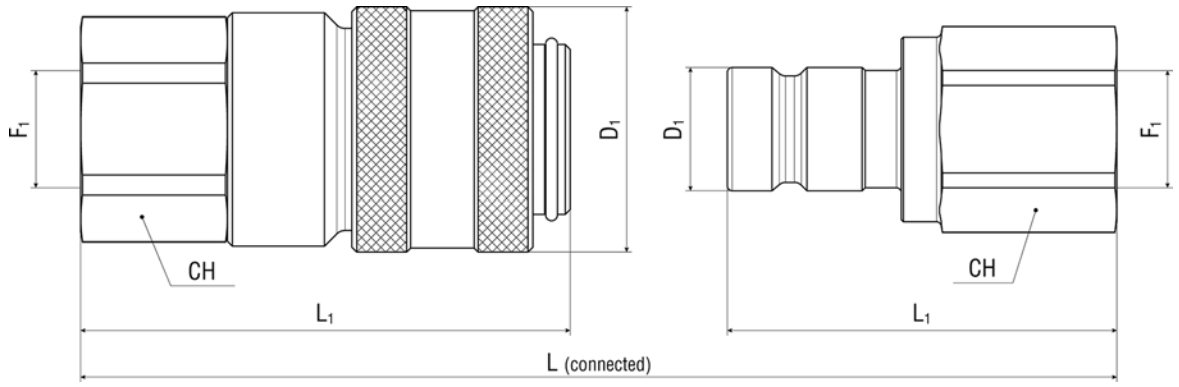

STANDARD ISO 15171-1 - DIAGNOSTIC DK

Female coupling - Female thread

Item Code				WP Conn.	BP Disconn.	Thread 1	F1	D1	CH	L1
	Dash	mm	inch	MPa	MPa			mm	mm	mm
1233585	04	6,0	1/4"	47,0	188,0	MET	M14X1.5	25,0	22,0	52,0
1233583	04	6,0	1/4"	47,0	188,0	NPTF	1/4-18	25,0	21,0	50,0
1233582	04	6,0	1/4"	47,0	188,0	NPTF	1/8-27	25,0	21,0	50,0
1233586	04	6,0	1/4"	47,0	188,0	SAE-OB	9/16-18	25,0	21,0	50,5

NPTF connection according to ANSI B1-20.3, metric connection according to ISO 6149-1, SAE UNF/UN connection according to SAE J 1926-1.

STANDARD ISO 15171-1 - DIAGNOSTIC DK

Male coupling - Female thread

Item Code				WP Conn.	BP Disconn.	Thread 1	F1	D1	CH	L1
	Dash	mm	inch	MPa	MPa			mm	mm	mm
1233588	04	6,0	1/4"	47,0	188,0	NPTF	1/4-18	12,6	19,0	45,3
1233587	04	6,0	1/4"	47,0	188,0	NPTF	1/8-27	12,6	19,0	39,8

NPTF connection according to ANSI B1-20.3.

Design and dimensions shown may be changed without prior notice

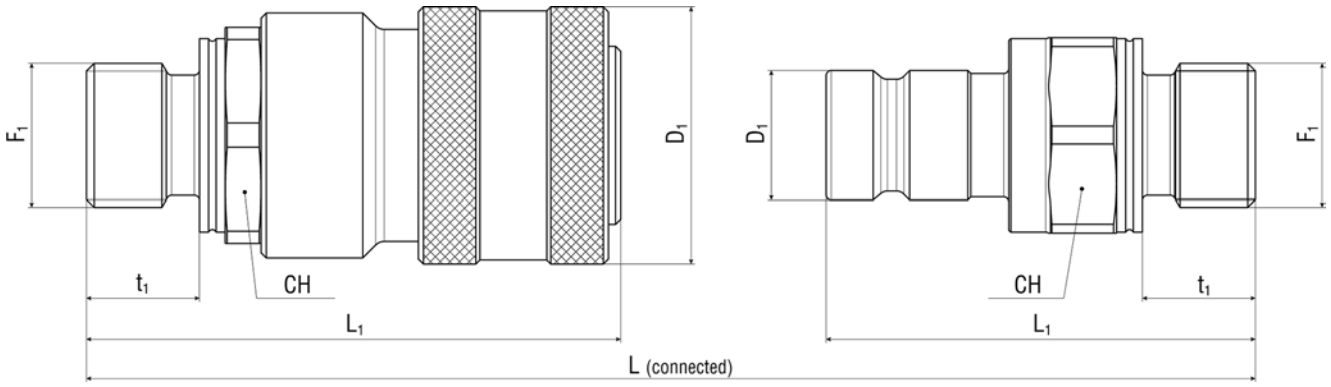

STANDARD ISO 15171-1 - DIAGNOSTIC DK

Female coupling - Male thread

Item Code				WP Conn.	BP Disconn.	Thread 1	F1	D1	t1	CH	L1
	Dash	mm	inch	MPa	MPa			mm	mm	mm	mm
1233584	04	6,0	1/4"	47,0	188,0	NPTF	1/4-18	25,0	14,5	21,0	53,0

NPTF connection according to ANSI B1-20.3.

STANDARD ISO 15171-1 - DIAGNOSTIC DK

Male coupling - Male thread

Item Code				WP Conn.	BP Disconn.	Thread 1	F1	D1	t1	CH	L1
	Dash	mm	inch	MPa	MPa			mm	mm	mm	mm
1233590	04	6,0	1/4"	47,0	188,0	MET	M14X1.5	12,6	11,0	19,0	41,8
1233589	04	6,0	1/4"	47,0	188,0	NPTF	1/4-18	12,6	14,5	19,0	42,8
1233591	04	6,0	1/4"	47,0	188,0	SAE-OB	9/16-18	12,6	12,0	19,0	40,3

NPTF connection according to ANSI B1-20.3, metric connection according to ISO 6149-1, SAE UNF/UN connection according to SAE J 1926-1.

Design and dimensions shown may be changed without prior notice

// HDK

SCREW TYPE POPPET STANDARD ISO 14541

TOP COAT

DN 8 to 32

to max WP 450 bar

// For high pressure load
// Robust construction
// Excellent flow rate
// Can be coupled at up to 50 bar
// German standard

General features: ARGUS HDK high pressure couplings can be used for connecting and disconnecting hydraulic lines. Their robust construction and tested components make them ideally suited for high and intermittent pressure loads. During the coupling action, valves that release and/or block the flow are automatically activated. The HDK quick release coupling, formed by coupling plug and coupling socket, is coupled by a crewing action with the hand nut of the plug component. Can be coupled to a max. of 50 bar residual pressure.

Materials: galvanised steel - Brass valve stem guide - TPE poppet valve seal (PTFE optional) - HNBR O-rings (other materials optional) - Polyethylene dust cap and plug - Stainless steel compression spring. Top Coat Cr-III zinc plating with additional trivalent passivation for outstanding surface protection.

Application: suitable for liquid lines with mineral oil-based hydraulic fluids to DIN 51524 and DIN 51525. Also available for flame-resistant hydraulic fluids to VDMA 24317, for pneumatics and water hydraulics in appropriate materials on request.

Norm: ISO 14541

Temperature range:
-30 °C +125 °C

Note: other sizes and connection types available on request. Specific instructions for installation, use and maintenance are separately provided.

Design and dimensions shown may be changed without prior notice

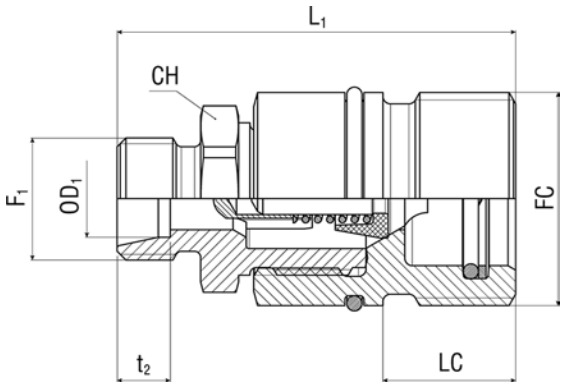

SCREW COUPLING - POPPET HDK

Female coupling (fixed part) - Metric 24° light/heavy series

Item Code				WP Conn.	Thread 1	F1	OD1	FC	t2	CH	LC	L1
	Dash	mm	inch	MPa			mm		mm	mm	mm	mm
1228941	05	8,0	5/16"	45,0	D24L	M14X1.5	8	M28x2	7,0	22,0	14,5	53,0
1228942	05	8,0	5/16"	45,0	D24L	M16X1.5	10	M28x2	7,0	22,0	14,5	53,0
1228943	08	13,0	1/2"	40,0	D24L	M18X1.5	12	M36x2	7,0	24,0	17,0	56,5
1228944	08	13,0	1/2"	40,0	D24L	M22X1.5	15	M36x2	7,0	24,0	17,0	57,2
1228945	16	25,0	1"	31,5	D24L	M26X1.5	18	M48x3	7,5	41,0	26,0	80,5
1228946	16	25,0	1"	31,5	D24L	M30X2	22	M48x3	7,5	41,0	26,0	82,5
1228953	05	8,0	5/16"	45,0	D24S	M18X1.5	10	M28x2	7,5	22,0	14,5	54,0
1228954	05	8,0	5/16"	45,0	D24S	M20X1.5	12	M28x2	7,5	22,0	14,5	54,0
1228955	08	13,0	1/2"	40,0	D24S	M22X1.5	14	M36x2	8,0	24,0	17,0	59,5
1228956	08	13,0	1/2"	40,0	D24S	M24X1.5	16	M36x2	8,5	24,0	17,0	59,5
1228957	16	25,0	1"	31,5	D24S	M30X2	20	M48x3	10,5	41,0	26,0	84,5
1219533	16	25,0	1"	31,5	D24S	M36X2	25	M48x3	12,0	41,0	26,0	86,5
1219532	20	32,0	1 1/4"	31,5	D24S	M42X2	30	M70x3	13,5	55,0	36,0	113,0
1219531	20	32,0	1 1/4"	31,5	D24S	M52X2	38	M70x3	16,0	55,0	36,0	115,0

Metric connection according to DIN EN ISO 8434-1.

Design and dimensions shown may be changed without prior notice

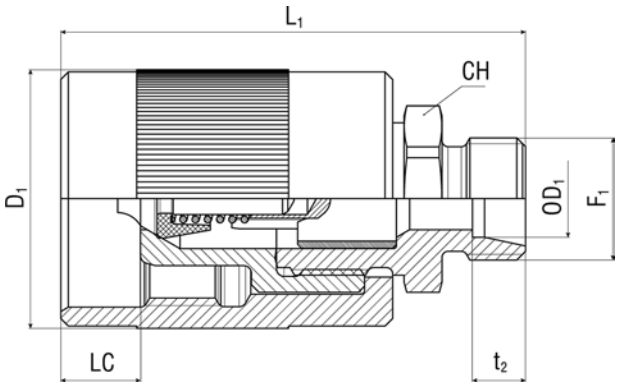

SCREW COUPLING - POPPET HDK

Male coupling (loose part) - Metric 24° light/heavy series

Item Code				WP Conn.	Thread 1	F1	OD1	FC	D1	t2	CH	LC	L1
	Dash	mm	inch	MPa			mm		mm	mm	mm	mm	mm
1228925	05	8,0	5/16"	45,0	D24L	M14X1.5	8	M28x2	34,0	7,0	22,0	12,5	63,0
1228926	05	8,0	5/16"	45,0	D24L	M16X1.5	10	M28x2	34,0	7,0	22,0	12,5	63,0
1228927	08	13,0	1/2"	40,0	D24L	M18X1.5	12	M36x2	42,0	7,0	24,0	15,5	70,5
1228928	08	13,0	1/2"	40,0	D24L	M22X1.5	15	M36x2	42,0	7,0	24,0	15,5	72,5
1228929	16	25,0	1"	31,5	D24L	M26X1.5	18	M48x3	55,0	7,5	41,0	11,0	89,0
1228930	16	25,0	1"	31,5	D24L	M30X2	22	M48x3	55,0	7,5	41,0	11,0	91,0
1228931	05	8,0	5/16"	45,0	D24S	M18X1.5	10	M28x2	34,0	7,5	22,0	12,5	64,0
1228932	05	8,0	5/16"	45,0	D24S	M20X1.5	12	M28x2	34,0	7,5	22,0	12,5	64,0
1228933	08	13,0	1/2"	40,0	D24S	M22X1.5	14	M36x2	42,0	8,0	24,0	15,5	73,5
1219525	08	13,0	1/2"	40,0	D24S	M24X1.5	16	M36x2	42,0	8,5	24,0	15,5	73,5
1228934	16	25,0	1"	31,5	D24S	M30X2	20	M48x3	55,0	10,5	41,0	11,0	93,0
1219524	16	25,0	1"	31,5	D24S	M36X2	25	M48x3	55,0	12,0	41,0	11,0	95,0
1219523	20	32,0	1 1/4"	31,5	D24S	M42X2	30	M70x3	80,0	13,5	55,0	10,0	114,0
1219522	20	32,0	1 1/4"	31,5	D24S	M52X2	38	M70x3	80,0	16,0	55,0	10,0	117,0

Metric connection according to DIN EN ISO 8434-1.

Design and dimensions shown may be changed without prior notice

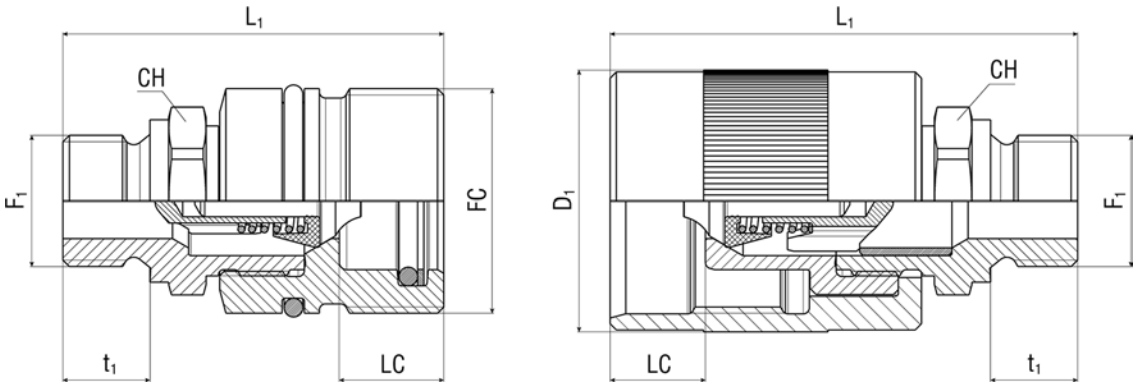

SCREW COUPLING - POPPET HDK

Female coupling (fixed part) - Male thread

Item Code				WP Conn.	Thread 1	F1	FC	t1	CH	LC	L1
	Dash	mm	inch	MPa				mm	mm	mm	mm
1228935	05	8,0	5/16"	45,0	BSPP	3/8-19	M28x2	12,0	22,0	14,5	54,0
1219534	08	13,0	1/2"	40,0	BSPP	1/2-14	M36x2	14,0	27,0	17,0	61,5
1228937	16	25,0	1"	31,5	BSPP	1-11	M48x3	18,0	41,0	26,0	90,0
1228936	16	25,0	1"	31,5	BSPP	3/4-14	M48x3	16,0	41,0	26,0	87,5

AGF connection according to DIN 3901 heavy duty range with pipe thread G (BSPP), type A to DIN 3852-2.

SCREW COUPLING - POPPET HDK

Male coupling (loose part) - Male thread

Item Code				WP Conn.	Thread 1	F1	D1	t1	CH	LC	L1
	Dash	mm	inch	MPa			mm	mm	mm	mm	mm
1228919	05	8,0	5/16"	45,0	BSPP	3/8-19	34,0	12,0	22,0	12,5	64,0
1219526	08	13,0	1/2"	40,0	BSPP	1/2-14	42,0	14,0	27,0	15,5	75,5
1228920	16	25,0	1"	31,5	BSPP	3/4-14	55,0	16,0	41,0	11,0	91,0
1228921	16	25,0	1"	31,5	BSPP	1-11	55,0	18,0	41,0	11,0	91,0

AGF connection according to DIN 3901 heavy duty range with pipe thread G (BSPP), type A to DIN 3852-2.

Design and dimensions shown may be changed without prior notice

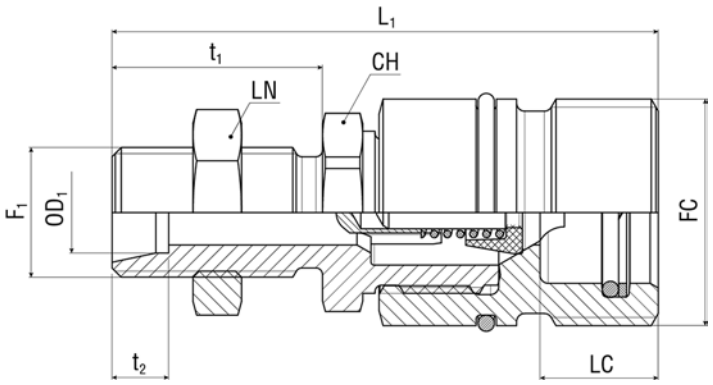

SCREW COUPLING - POPPET HDK

Female coupling (fixed part) - Metric 24° light/heavy series bulkhead

Item Code				WP Conn.	Thread 1	F1	OD1	FC	t1	t2	CH	LN	LC	L1
	Dash	mm	inch	MPa			mm		mm	mm	mm	mm	mm	mm
1228947	05	8,0	5/16"	45,0	D24L	M14X1.5	8	M28x2	25,0	7,0	22,0	19,0	14,5	67,0
1228948	05	8,0	5/16"	45,0	D24L	M16X1.5	10	M28x2	26,0	7,0	22,0	22,0	14,5	67,0
1228949	08	13,0	1/2"	40,0	D24L	M18X1.5	12	M36x2	25,0	7,0	24,0	24,0	17,0	70,5
1228950	08	13,0	1/2"	40,0	D24L	M22X1.5	15	M36x2	27,0	7,0	24,0	30,0	17,0	72,5
1228951	16	25,0	1"	31,5	D24L	M26X1.5	18	M48x3	34,0	7,5	41,0	30,0	26,0	102,5
1228952	16	25,0	1"	31,5	D24L	M30X2	22	M48x3	36,0	7,5	41,0	41,0	26,0	104,5
1228958	05	8,0	5/16"	45,0	D24S	M18X1.5	10	M28x2	27,0	7,5	22,0	24,0	14,5	69,0
1228959	05	8,0	5/16"	45,0	D24S	M20X1.5	12	M28x2	27,0	7,5	22,0	27,0	14,5	69,0
1228960	08	13,0	1/2"	40,0	D24S	M22X1.5	14	M36x2	27,0	8,0	24,0	30,0	17,0	73,0
1228961	08	13,0	1/2"	40,0	D24S	M24X1.5	16	M36x2	27,0	8,5	27,0	32,0	17,0	73,0
1219539	16	25,0	1"	31,5	D24S	M36X2	20	M48x3	36,0	10,5	41,0	41,0	26,0	104,5
1228962	16	25,0	1"	31,5	D24S	M36X2	25	M48x3	38,0	12,0	41,0	46,0	26,0	106,5
1228963	20	32,0	1 1/4"	31,5	D24S	M42X2	30	M70x3	40,0	13,5	55,0	50,0	36,0	131,0
1228964	20	32,0	1 1/4"	31,5	D24S	M52X2	38	M70x3	40,0	16,0	55,0	65,0	36,0	134,0

Metric connection according to DIN EN ISO 8434-1.

Design and dimensions shown may be changed without prior notice

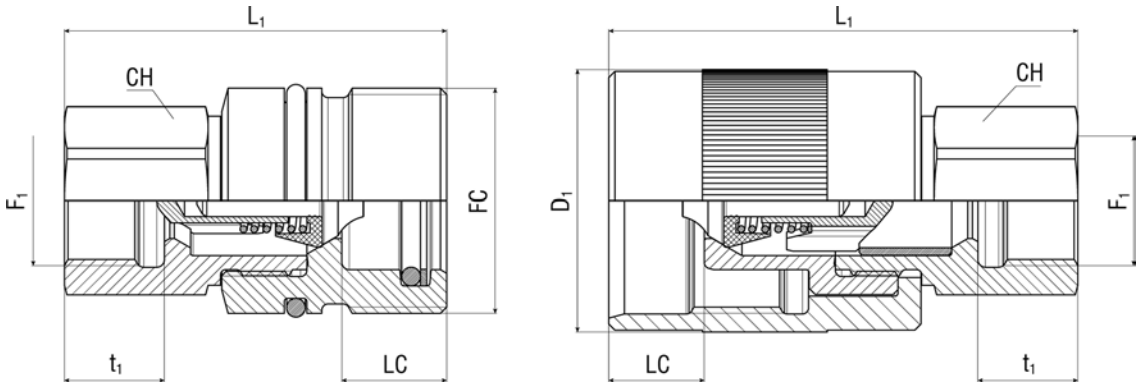

SCREW COUPLING - POPPET HDK

Female coupling (fixed part) - Female thread

Item Code				WP Conn.	Thread 1	F1	FC	t1	CH	LC	L1
	Dash	mm	inch	MPa				mm	mm	mm	mm
1219538	05	8,0	5/16"	45,0	BSPP	3/8-19	M28x2	14,0	22,0	14,5	55,0
1219537	08	13,0	1/2"	40,0	BSPP	1/2-14	M36x2	16,0	27,0	17,0	60,5
1219535	16	25,0	1"	31,5	BSPP	1-11	M48x3	20,0	41,0	26,0	92,5
1219536	16	25,0	1"	31,5	BSPP	3/4-14	M48x3	18,0	41,0	26,0	89,5
1230056	20	32,0	1 1/4"	31,5	BSPP	1 1/4-11	M70x3	-	55,0	36,0	115,0
1228938	08	13,0	1/2"	40,0	NPTF	1/2-14	M36x2	16,5	27,0	17,0	61,5
1228939	16	25,0	1"	31,5	NPTF	3/4-14	M48x3	17,0	41,0	26,0	84,5
1228940	16	25,0	1"	31,5	NPTF	1-11 1/2	M48x3	20,5	41,0	26,0	88,5
1232387	20	32,0	1 1/4"	31,5	NPTF	1 1/4-11 1/2	M70x3	-	55,0	36,0	115,0
1231479	16	25,0	1"	31,5	SAE-OB	1 1/16-12	M48x3	18,0	41,0	26,0	89,5

BSPP connection according to DIN 3852-2-X, NPTF connection according to ANSI B1-20.3, metric connection according to DIN 3852, SAE UNF/UN connection according to SAE J 1926-1.

SCREW COUPLING - POPPET HDK

Male coupling (loose part) - Female thread

Item Code				WP Conn.	Thread 1	F1	D1	t1	CH	LC	L1
	Dash	mm	inch	MPa			mm	mm	mm	mm	mm
1219530	05	8,0	5/16"	45,0	BSPP	3/8-19	34,0	14,0	22,0	12,5	65,0
1219529	08	13,0	1/2"	40,0	BSPP	1/2-14	42,0	16,0	27,0	15,5	74,5
1219528	16	25,0	1"	31,5	BSPP	3/4-14	55,0	18,0	41,0	11,0	98,0
1219527	16	25,0	1"	31,5	BSPP	1-11	55,0	20,0	41,0	11,0	101,0
1230063	20	32,0	1 1/4"	31,5	BSPP	1 1/4-11	80,0	-	55,0	10,0	117,0
1228922	08	13,0	1/2"	40,0	NPTF	1/2-14	42,0	16,5	27,0	15,5	75,5
1228923	16	25,0	1"	31,5	NPTF	3/4-14	55,0	17,0	41,0	11,0	93,0
1228924	16	25,0	1"	31,5	NPTF	1-11 1/2	55,0	20,5	41,0	11,0	97,0
1232388	20	32,0	1 1/4"	31,5	NPTF	1 1/4-11 1/2	80,0	-	55,0	10,0	117,0
1231480	16	25,0	1"	31,5	SAE-OB	1 1/16-12	55,0	18,0	41,0	11,0	98,0

BSPP connection according to DIN 3852-2-X, NPTF connection according to ANSI B1-20.3, metric connection according to DIN 3852, SAE UNF/UN connection according to SAE J 1926-1.

Design and dimensions shown may be changed without prior notice

SCREW COUPLING - POPPET HDK

Dust cap for female coupling (fixed part)

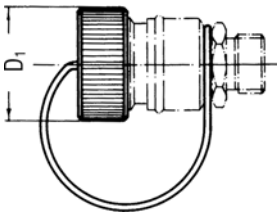

Item Code	Material				D1
		Dash	mm	inch	mm
1228904	PE	05	8,0	5/16"	34,0
1228899	PE	08	13,0	1/2"	42,0
1228901	PE	16	25,0	1"	55,0
1228902	PE	20	32,0	1 1/4"	80,0

SCREW COUPLING - POPPET HDK

Dust plug for male coupling (loose part)

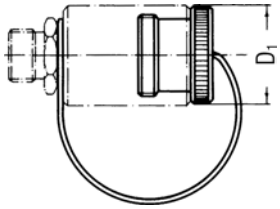

Item Code	Material				D1
		Dash	mm	inch	mm
1228897	PE	05	8,0	5/16"	34,0
1228892	PE	08	13,0	1/2"	42,0
1228894	PE	16	25,0	1"	55,0
1228895	PE	20	32,0	1 1/4"	80,0

Design and dimensions shown may be changed without prior notice

// RK

SCREW TYPE FLAT FACE

TOP COAT

DN 10 to 25

to max WP 315 bar

// Low leak-oil rates, eco-friendly
// Robust construction
// Low pressure drop
// Can be coupled by hand at up to 20 bar

General features: ARGUS RK pipe couplings enable oil leakfree connection and disconnection of hydraulic lines. The coupling consists of one fixed and one loose half. The two halves are coupled by a screwing action with hand nuts and/or hand wheel. During this process, valves in the two halves open against spring force. During decoupling, these valves close before the coupling halves separate. This prevents air intake into the lines, eliminating the need of secondary venting. Coupling can be carried out by hand while pressurised at up to approx. 20 bar, or by means of tools under higher pressures. In the uncoupled status, the coupling halves are protected from contamination and damage with the components indicated as accessories.

Materials: galvanised steel housing and internal components - Brass vent sleeve in the loose half - All seals HNBR (FPM seals optional) - Polyethylene dust cap and plug. Top Coat Cr-III zinc plating with additional trivalent passivation for outstanding surface protection.

Application: suitable for liquid lines with mineral oil-based hydraulic fluids to DIN 51524 and DIN 51525. Also available for flame-resistant hydraulic fluids to VDMA 24317, for pneumatics and water hydraulics in appropriate materials on request.

Temperature range:
-30 °C +125 °C
Temperature up to 200°C when FPM seals are used

Note: other sizes and connection types available on request. Specific instructions for installation, use and maintenance are separately provided.

Design and dimensions shown may be changed without prior notice

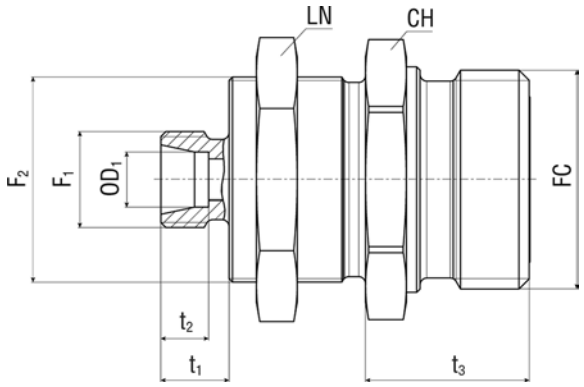

SCREW COUPLING - FLAT FACE RK

Female coupling (fixed part with hexagon nut) - Metric 24° light/heavy series

Item Code				WP Conn.	Thread 1	F1	F2	OD1	FC	t1	t2	t3	CH	LN
	Dash	mm	inch	MPa				mm		mm	mm	mm	mm	mm
1228973	06	10,0	3/8"	31,5	D24L	M14X1.5	M30x1	8	M32x3	10,0	7,0	24,0	36,0	36,0
1228975	06	10,0	3/8"	31,5	D24L	M16X1.5	M30x1	10	M32x3	11,0	7,0	24,0	36,0	36,0
1228977	06	10,0	3/8"	31,5	D24L	M18X1.5	M30x1	12	M32x3	11,0	7,0	24,0	36,0	36,0
1228979	10	16,0	5/8"	31,5	D24L	M22X1.5	M45x1,5	15	M48x3	12,0	7,0	35,0	55,0	55,0
1228981	10	16,0	5/8"	31,5	D24L	M26X1.5	M45x1,5	18	M48x3	12,0	7,5	35,0	55,0	55,0
1228983	16	25,0	1"	16,0	D24L	M30X2	M56x1,5	22	M60x3	14,0	7,5	34,0	64,0	70,0
1228985	16	25,0	1"	16,0	D24L	M36X2	M56x1,5	28	M60x3	14,0	7,5	34,0	64,0	70,0
1228987	06	10,0	3/8"	31,5	D24S	M18X1.5	M30x1	10	M32x3	12,0	7,5	24,0	36,0	36,0
1228989	06	10,0	3/8"	31,5	D24S	M20X1.5	M30x1	12	M32x3	12,0	7,5	24,0	36,0	36,0
1228990	06	10,0	3/8"	31,5	D24S	M22X1.5	M30x1	14	M32x3	14,0	8,0	24,0	36,0	36,0
1222558	10	16,0	5/8"	31,5	D24S	M24X1.5	M45x1,5	16	M48x3	14,0	8,5	35,0	55,0	55,0
1228993	10	16,0	5/8"	31,5	D24S	M30X2	M45x1,5	20	M48x3	16,0	10,5	35,0	55,0	55,0
1228995	16	25,0	1"	16,0	D24S	M36X2	M56x1,5	25	M60x3	18,0	12,0	34,0	64,0	70,0
1228997	16	25,0	1"	16,0	D24S	M42X2	M56x1,5	30	M60x3	20,0	13,5	34,0	64,0	70,0

Metric connection according to DIN 8434-1.

Design and dimensions shown may be changed without prior notice

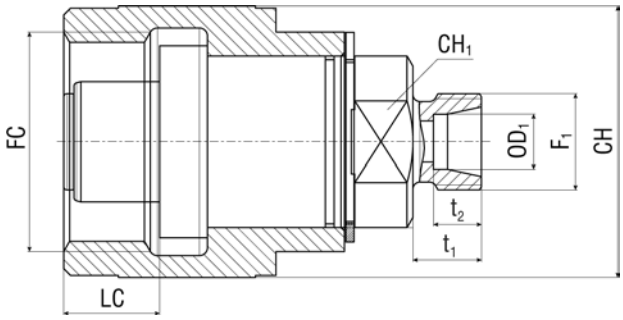

SCREW COUPLING - FLAT FACE RK

Male coupling (loose part) - Metric 24° light/heavy series

Item Code				WP Conn.	Thread 1	F1	OD1	FC	t1	t2	CH	CH1
	Dash	mm	inch	MPa			mm		mm	mm	mm	mm
1229629	06	10,0	3/8"	31,5	D24L	M14X1.5	8	M32x3	10,0	7,0	40,0	32,0
1229630	06	10,0	3/8"	31,5	D24L	M16X1.5	10	M32x3	11,0	7,0	40,0	32,0
1229631	06	10,0	3/8"	31,5	D24L	M18X1.5	12	M32x3	11,0	7,0	40,0	32,0
1229632	10	16,0	5/8"	31,5	D24L	M22X1.5	15	M48x3	12,0	7,0	60,0	32,0
1229633	10	16,0	5/8"	31,5	D24L	M26X1.5	18	M48x3	12,0	7,5	60,0	32,0
1229634	16	25,0	1"	16,0	D24L	M30X2	22	M60x3	14,0	7,5	154,0	41,0
1229635	16	25,0	1"	16,0	D24L	M36X2	28	M60x3	14,0	7,5	154,0	41,0
1229636	06	10,0	3/8"	31,5	D24S	M18X1.5	10	M32x3	12,0	7,5	40,0	32,0
1229637	06	10,0	3/8"	31,5	D24S	M20X1.5	12	M32x3	12,0	7,5	40,0	32,0
1229638	06	10,0	3/8"	31,5	D24S	M22X1.5	14	M32x3	14,0	8,0	40,0	32,0
1222559	10	16,0	5/8"	31,5	D24S	M24X1.5	16	M48x3	14,0	8,5	60,0	32,0
1229640	10	16,0	5/8"	31,5	D24S	M30X2	20	M48x3	16,0	10,5	60,0	32,0
1229641	16	25,0	1"	16,0	D24S	M36X2	25	M60x3	18,0	12,0	154,0	41,0
1229642	16	25,0	1"	16,0	D24S	M42X2	30	M60x3	20,0	13,5	154,0	41,0

Metric connection according to DIN 8434-1.

Design and dimensions shown may be changed without prior notice

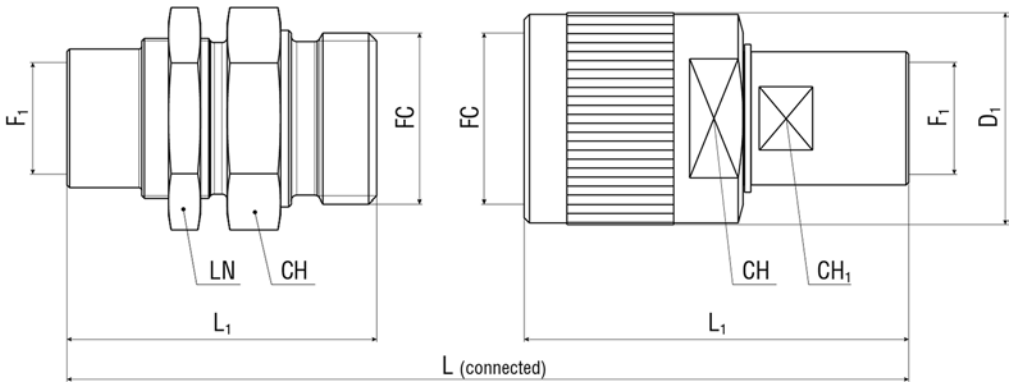

SCREW COUPLING - FLAT FACE RK

Female coupling (fixed part with hexagon nut) - Female thread

Item Code				WP Conn.	Thread 1	F1	FC	CH	LN	L1	L
	Dash	mm	inch	MPa				mm	mm	mm	mm
1232376	06	10,0	3/8"	31,5	BSPP	1/2-14	M32x3	36,0	36,0	58,0	116,00
1232377	10	16,0	5/8"	31,5	BSPP	3/4-14	M48x3	55,0	55,0	82,0	144,00
1232378	16	25,0	1"	16,0	BSPP	1-11	M60x3	64,0	70,0	78,0	165,50

BSPP connection according to DIN 3852-2-X.

SCREW COUPLING - FLAT FACE RK

Male coupling (loose part) - Female thread

Item Code				WP Conn.	Thread 1	F1	FC	D1	CH	CH1	L1	L
	Dash	mm	inch	MPa				mm	mm	mm	mm	mm
1232379	06	10,0	3/8"	31,5	BSPP	1/2-14	M32x3	40,0	22,0	32,0	37,0	116,00
1232380	10	16,0	5/8"	31,5	BSPP	3/4-14	M48x3	60,0	32,0	50,0	86,0	144,00
1232381	16	25,0	1"	16,0	BSPP	1-11	M60x3	154,0	41,0	41,0	88,5	165,50

BSPP connection according to DIN 3852-2-X.
1232381: D1 with hand wheel

Design and dimensions shown may be changed without prior notice

DN 10 to 16 with union nut

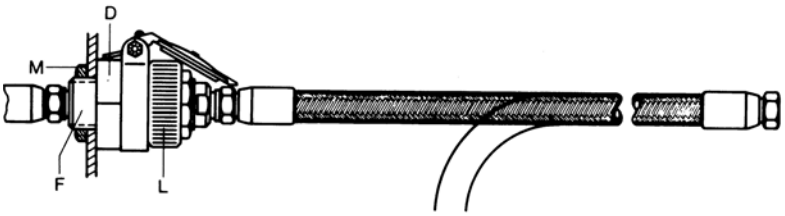

Fixed half with flange

DN 25 with hand wheel
Dust protection with flange

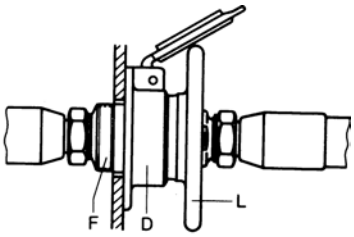

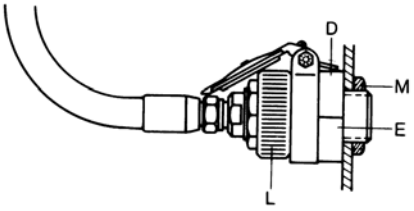

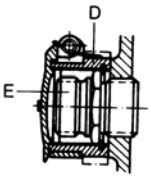

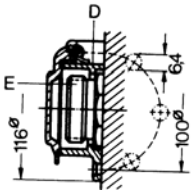

Blind socket with dust protection

SCREW COUPLING - FLAT FACE RK

Dust protection D

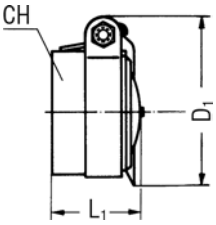

Item Code				D1	CH	L1
	Dash	mm	inch	mm	mm	mm
1228890	06	10,0	3/8"	68,0	46,0	35,0
1228888	10	16,0	5/8"	95,5	70,0	50,0
1228889	16	25,0	1"	107,0	-	47,0

SCREW COUPLING - FLAT FACE RK

Blind socket E

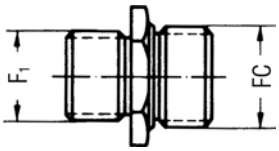

Item Code				Thread 1	F1	FC
	Dash	mm	inch			
1228867	06	10,0	3/8"	MET	M30X1.5	M32x3
1228848	10	16,0	5/8"	MET	M45X1.5	M48x3
1228857	16	25,0	1"	MET	-	M60x3

Design and dimensions shown may be changed without prior notice

// RKN

SCREW TYPE FLAT FACE

TOP COAT

DN 10 to 25

to max WP 450 bar

// Very low leak-oil rates, eco-friendly
// Highly robust construction
// Low pressure drop
// Locking system for safety purposes

General features: ARGUS RKN quick release couplings enable oil leak-free connection and disconnection of hydraulic lines. Their robust construction and tested components make them ideally suited for high and intermittent pressure loads. During the coupling action, valves that release and/or block the flow are automatically activated. The RKN quick release coupling, formed by coupling plug and coupling socket, is coupled by a screwing action with the hand nut of the plug component.

Materials: galvanised steel - Brass valve stem guide - HNBR O-rings (other materials optional). Top Coat Cr-III zinc plating with additional trivalent passivation for outstanding surface protection.

Application: suitable for liquid lines with mineral oil-based hydraulic fluids to DIN 51524 and DIN 51525. Also available for flame-resistant hydraulic fluids to VDMA 24317, for pneumatics and water hydraulics in appropriate materials on request.

Temperature range:
-30 °C +125 °C

Note: other sizes and connection types available on request. Specific instructions for installation, use and maintenance are separately provided.

Design and dimensions shown may be changed without prior notice

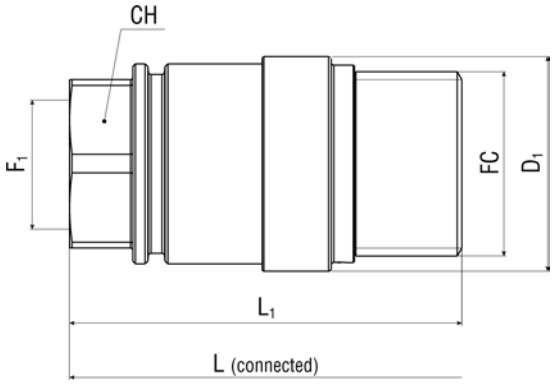

SCREW COUPLING - FLAT FACE RKN

Female coupling - Female thread

Item Code				WP Conn.	WP Disconn.	Thread 1	F1	FC	D1	CH	L1	L
	Dash	mm	inch	MPa	MPa				mm	mm	mm	mm
1232527	06	10,0	3/8"	45,0	35,0	BSPP	3/8-19	M28x2	34,8	27,0	69,3	117,40
1232463	08	13,0	1/2"	45,0	35,0	BSPP	1/2-14	M35x3	40,8	32,0	74,5	127,40
1232518	10	16,0	5/8"	45,0	35,0	BSPP	3/4-14	M38x3	43,8	34,0	81,3	133,50
1232464	12	19,0	3/4"	45,0	35,0	BSPP	3/4-14	M43x3	51,0	42,0	93,0	156,00
1232529	16	25,0	1"	40,0	35,0	BSPP	1 1/4-11	M52x4	59,8	50,0	101,0	176,90
1232528	16	25,0	1"	40,0	35,0	BSPP	1-11	M52x4	59,8	50,0	101,0	176,90
1232530	06	10,0	3/8"	45,0	35,0	NPTF	3/8-18	M28x2	34,8	27,0	69,3	117,40
1232465	08	13,0	1/2"	45,0	35,0	NPTF	1/2-14	M35x3	40,8	32,0	74,5	127,40
1232539	10	16,0	5/8"	45,0	35,0	NPTF	3/4-14	M38x3	43,8	34,0	81,3	133,50
1232466	12	19,0	3/4"	45,0	35,0	NPTF	3/4-14	M43x3	51,0	42,0	93,0	156,00
1232532	16	25,0	1"	40,0	35,0	NPTF	1 1/4-11 1/2	M52x4	59,8	50,0	101,0	176,90
1232531	16	25,0	1"	40,0	35,0	NPTF	1-11 1/2	M52x4	59,8	50,0	101,0	176,90

BSPP connection according to DIN 3852-2-X, NPTF connection according to ANSI B1-20.3.

Design and dimensions shown may be changed without prior notice

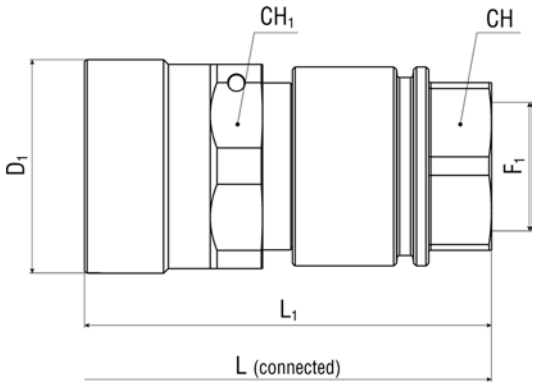

SCREW COUPLING - FLAT FACE RKN

Male coupling - Female thread

Item Code				WP Conn.	WP Disconn.	Thread 1	F1	D1	CH	CH1	L1	L
	Dash	mm	inch	MPa	MPa			mm	mm	mm	mm	mm
1232533	06	10,0	3/8"	45,0	35,0	BSPP	3/8-19	33,8	33,0	27,0	70,6	117,40
1232467	08	13,0	1/2"	45,0	35,0	BSPP	1/2-14	40,8	39,0	32,0	77,7	127,40
1232523	10	16,0	5/8"	45,0	35,0	BSPP	3/4-14	43,8	34,0	42,0	78,5	133,50
1232468	12	19,0	3/4"	45,0	35,0	BSPP	3/4-14	51,2	50,0	42,0	94,3	156,00
1232535	16	25,0	1"	40,0	35,0	BSPP	1 1/4-11	59,8	60,0	50,0	108,7	176,90
1232534	16	25,0	1"	40,0	35,0	BSPP	1-11	59,8	60,0	50,0	108,7	176,90
1232536	06	10,0	3/8"	45,0	35,0	NPTF	3/8-18	33,8	33,0	27,0	70,6	117,40
1232469	08	13,0	1/2"	45,0	35,0	NPTF	1/2-14	40,8	39,0	32,0	77,7	127,40
1232540	10	16,0	5/8"	45,0	35,0	NPTF	3/4-14	43,8	34,0	42,0	78,5	133,50
1232470	12	19,0	3/4"	45,0	35,0	NPTF	3/4-14	51,2	50,0	42,0	94,3	156,00
1232537	16	25,0	1"	40,0	35,0	NPTF	1-11 1/2	59,8	60,0	50,0	108,7	176,90
1232538	16	25,0	1"	40,0	35,0	NPTF	1 1/4-11 1/2	59,8	60,0	50,0	108,7	176,90

BSPP connection according to DIN 3852-2-X, NPTF connection according to ANSI B1-20.3.

Design and dimensions shown may be changed without prior notice

// RKN-P

SCREW TYPE FLAT FACE

TOP COAT

DN 10 to 25

to max WP 450 bar

// Connectable under pressure with patented system
// Very low leak-oil rates, eco-friendly
// Highly robust construction
// Low pressure drop
// Locking system for safety purposes

General features: connectable under pressure ARGUS RKN-P quick release couplings enable oil leak-free connection and disconnection of hydraulic lines. Their robust construction and tested components make them ideally suited for high and intermittent pressure loads. During the coupling action, valves that release and/or block the flow are automatically activated. The RPN quick release coupling, formed by coupling plug and coupling socket, is coupled by a screwing action with the hand nut of the plug component.

Materials: galvanised steel - Brass valve stem guide - HNBR O-rings (other materials optional). Top Coat Cr-III zinc plating with additional trivalent passivation for outstanding surface protection.

Application: suitable for liquid lines with mineral oil-based hydraulic fluids to DIN 51524 and DIN 51525. Also available for flame-resistant hydraulic fluids to VDMA 24317, for pneumatics and water hydraulics in appropriate materials on request.

Temperature range:
-30 °C +125 °C

Note: other sizes and connection types available on request. Specific instructions for installation, use and maintenance are separately provided.

Design and dimensions shown may be changed without prior notice

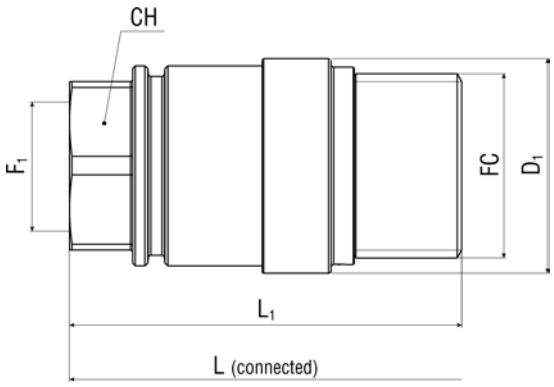

SCREW COUPLING - FLAT FACE RKN-P CONNECTABLE UNDER PRESSURE

Female coupling - Female thread

Item Code				WP Conn.	WP Disconn.	Thread 1	F1	FC	D1	CH	L1
	Dash	mm	inch	MPa	MPa				mm	mm	mm
1234996	06	10,0	3/8"	45,0	35,0	BSPP	3/8-19	M28x2	34,8	27,0	69,3
1234997	08	13,0	1/2"	45,0	35,0	BSPP	1/2-14	M35x3	40,8	32,0	74,5
1234998	10	16,0	5/8"	45,0	35,0	BSPP	3/4-14	M38x3	43,8	34,0	81,3
1234999	12	19,0	3/4"	45,0	35,0	BSPP	3/4-14	M43x3	51,0	42,0	93,0
1235001	16	25,0	1"	45,0	35,0	BSPP	1 1/4-11	M52x4	59,8	50,0	101,0
1235000	16	25,0	1"	45,0	35,0	BSPP	1-11	M52x4	59,8	50,0	101,0
1235002	06	10,0	3/8"	45,0	35,0	NPTF	3/8-18	M28x2	34,8	27,0	69,3
1235003	08	13,0	1/2"	45,0	35,0	NPTF	1/2-14	M35x3	40,8	32,0	74,5
1235004	10	16,0	5/8"	45,0	35,0	NPTF	3/4-14	M38x3	43,8	34,0	81,3
1235005	12	19,0	3/4"	45,0	35,0	NPTF	3/4-14	M43x3	51,0	42,0	93,0
1235007	16	25,0	1"	45,0	35,0	NPTF	1 1/4-11 1/2	M52x4	59,8	50,0	101,0
1235006	16	25,0	1"	45,0	35,0	NPTF	1-11 1/2	M52x4	59,8	50,0	101,0

BSPP connection according to DIN 3852-2-X, NPTF connection according to ANSI B1-20.3.

Design and dimensions shown may be changed without prior notice

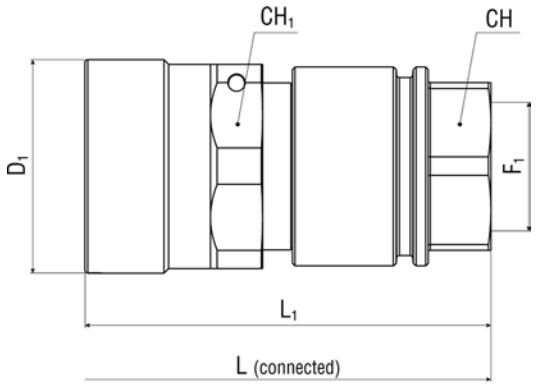

SCREW COUPLING - FLAT FACE RKN-P CONNECTABLE UNDER PRESSURE

Male coupling - Female thread

Item Code				WP Conn.	WP Disconn.	Thread 1	F1	D1	CH	CH1	L1
	Dash	mm	inch	MPa	MPa			mm	mm	mm	mm
1235008	06	10,0	3/8"	45,0	35,0	BSPP	3/8-19	33,8	33,0	27,0	97,1
1235009	08	13,0	1/2"	45,0	35,0	BSPP	1/2-14	40,8	39,0	32,0	107,0
1235010	10	16,0	5/8"	45,0	35,0	BSPP	3/4-14	43,8	34,0	42,0	117,8
1235011	12	19,0	3/4"	45,0	35,0	BSPP	3/4-14	51,2	50,0	42,0	127,8
1235012	16	25,0	1"	45,0	35,0	BSPP	1-11	59,8	60,0	50,0	137,0
1235013	16	25,0	1"	45,0	35,0	BSPP	1 1/4-11	59,8	60,0	50,0	137,0
1235014	06	10,0	3/8"	45,0	35,0	NPTF	3/8-18	33,8	33,0	27,0	97,1
1235015	08	13,0	1/2"	45,0	35,0	NPTF	1/2-14	40,8	39,0	32,0	107,0
1235016	10	16,0	5/8"	45,0	35,0	NPTF	3/4-14	43,8	34,0	42,0	117,8
1235017	12	19,0	3/4"	45,0	35,0	NPTF	3/4-14	51,2	50,0	42,0	127,8
1235018	16	25,0	1"	45,0	35,0	NPTF	1-11 1/2	59,8	60,0	50,0	137,0
1235019	16	25,0	1"	45,0	35,0	NPTF	1 1/4-11 1/2	59,8	60,0	50,0	137,0

BSPP connection according to DIN 3852-2-X, NPTF connection according to ANSI B1-20.3.

Design and dimensions shown may be changed without prior notice

// AK

SCREW TYPE FLAT FACE

TOP COAT

DN 10 to 16

to max WP 315 bar

// Break-away function
// Extremely low leak-oil rates, very eco-friendly
// Low pressure drop
// Can be coupled by hand at up to 20 bar

General features: ARGUS AK break-away couplings enable a leak-oil free connection or disconnection of hydraulic lines. The coupling consists of one fixed and one loose half. The two halves are coupled by a screwing action with hand nut and/or hand wheel. During this process, valves in the two halves open against spring force. During decoupling, these valves close before the coupling halves separate. This prevents air intake into the lines, eliminating the need of secondary venting. Coupling can be carried out by hand while pressurised at up to approx. 20 bar, or by means of tools under higher pressures. The coupling halves can also be pulled apart. This possibility prevents the pipeline system bursting under tensile load and thereby the medium escaping. During the pull-off stroke, the fixed half must be connected to a hose assembly or a spring-mounted pipe. In the uncoupled status, the coupling halves are protected from contamination and damage with the components indicated under Accessories.

Materials: galvanised steel housing and internal parts - Brass vent bush in the loose half - Steel DN 6 to 10 pull-off housing, from DN 12 (13) malleable iron - All seals NBR (FPM optional). Top Coat Cr-III zinc plating with additional trivalent passivation for outstanding surface protection.

Application: suitable for liquid lines with mineral oil-based hydraulic fluids to DIN 51524 and DIN 51525. Also available for flame-resistant hydraulic fluids to VDMA 24317, for pneumatics and water hydraulics in appropriate materials on request.

Temperature range:
-30 °C +100 °C

Note: other sizes and connection types available on request. Specific instructions for installation, use and maintenance are separately provided.
Same dust protection and blind socket as RK range.

Design and dimensions shown may be changed without prior notice

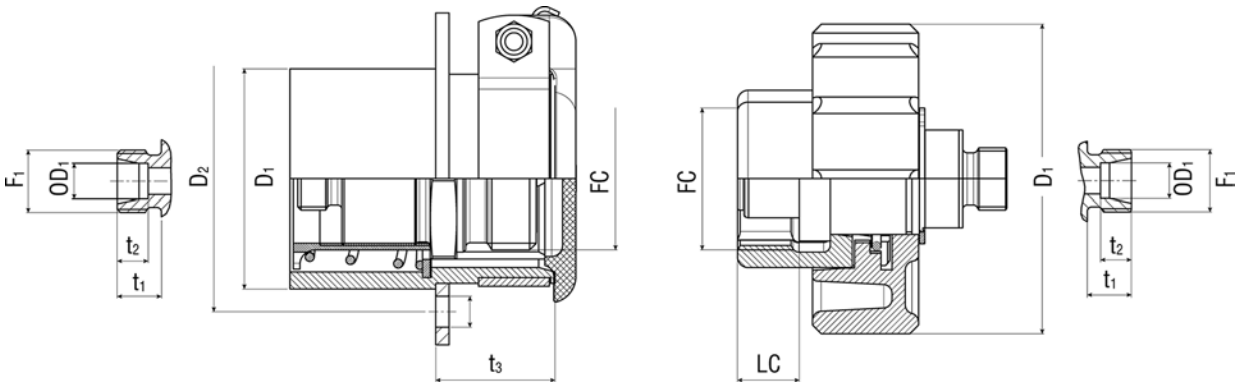

SCREW COUPLING - FLAT FACE AK

Female coupling (fixed part) - Metric 24° light/heavy series

Item Code				WP Conn.	Thread 1	F1	OD1	FC	D1	D2	t1	t2	t3
	Dash	mm	inch	MPa			mm		mm	mm	mm	mm	mm
1228868	06	10,0	3/8"	31,5	D24L	M14X1.5	8	M32x3	50,0	60,0	10,0	7,0	27,0
1228869	06	10,0	3/8"	31,5	D24L	M16X1.5	10	M32x3	50,0	60,0	11,0	7,0	27,0
1228870	06	10,0	3/8"	31,5	D24L	M18X1.5	12	M32x3	50,0	60,0	11,0	7,0	27,0
1228871	10	16,0	5/8"	31,5	D24L	M22X1.5	15	M48x3	75,0	95,0	12,0	7,0	42,0
1228872	10	16,0	5/8"	31,5	D24L	M26X1.5	18	M48x3	75,0	95,0	12,0	7,5	42,0
1228873	06	10,0	3/8"	31,5	D24S	M18X1.5	10	M60x3	50,0	60,0	12,0	7,5	27,0
1228874	06	10,0	3/8"	31,5	D24S	M20X1.5	12	M60x3	50,0	60,0	12,0	7,5	27,0
1228875	06	10,0	3/8"	31,5	D24S	M22X1.5	14	M32x3	50,0	60,0	-	-	27,0
1228876	10	16,0	5/8"	31,5	D24S	M24X1.5	16	M32x3	75,0	95,0	14,0	8,5	42,0
1228877	10	16,0	5/8"	31,5	D24S	M30X2	20	M32x3	75,0	95,0	16,0	10,5	42,0

Metric connection according to DIN EN ISO 8434-1.

SCREW COUPLING - FLAT FACE AK

Male coupling (loose part) - Metric 24° light/heavy series

Item Code				WP Conn.	Thread 1	F1	OD1	FC	D1	t1	t2	LC
	Dash	mm	inch	MPa			mm		mm	mm	mm	mm
1228878	06	10,0	3/8"	31,5	D24L	M14X1.5	8	M32x3	70,0	10,0	7,0	14,0
1228879	06	10,0	3/8"	31,5	D24L	M16X1.5	10	M32x3	70,0	11,0	7,0	14,0
1228880	06	10,0	3/8"	31,5	D24L	M18X1.5	12	M32x3	70,0	11,0	7,0	14,0
1228881	10	16,0	5/8"	31,5	D24L	M22X1.5	15	M48x3	75,0	12,0	7,0	24,0
1228882	10	16,0	5/8"	31,5	D24L	M26X1.5	18	M48x3	75,0	12,0	7,5	24,0
1228883	06	10,0	3/8"	31,5	D24S	M18X1.5	10	M60x3	70,0	12,0	7,5	14,0
1228884	06	10,0	3/8"	31,5	D24S	M20X1.5	12	M60x3	70,0	12,0	7,5	14,0
1228885	06	10,0	3/8"	31,5	D24S	M22X1.5	14	M32x3	70,0	-	-	14,0
1228886	10	16,0	5/8"	31,5	D24S	M24X1.5	16	M32x3	75,0	14,0	8,5	24,0
1228887	10	16,0	5/8"	31,5	D24S	M30X2	20	M32x3	75,0	16,0	10,5	24,0

Metric connection according to DIN EN ISO 8434-1.

Design and dimensions shown may be changed without prior notice

// PTK

SCREW TYPE POPPET STANDARD ISO 14540

TOP COAT

DN 6 to 10

WP 700 bar

// Typically employed in power tools
// Compatibility with other couplings in-use

General features: ARGUS PTK high pressure couplings can be used for connecting and disconnecting hydraulic lines. Their robust construction and tested components make them ideally suited for high and intermittent pressure loads. During the coupling action, valves that release and/or block the flow are automatically activated. The PTK quick release coupling, formed by coupling plug and coupling socket, is coupled by a screwing action with the hand nut of the plug component.

Materials: galvanised steel - HNBR O-rings (other materials optional) - Thermoplastic dust cap and dust plug. Top Coat Cr-III zinc plating with additional trivalent passivation for outstanding surface protection.

Application: suitable for liquid lines with mineral oil-based hydraulic fluids to DIN 51524 T1+T2.

Norm: ISO 14540

Temperature range:
-30 °C +125 °C

Note: rated flow / pressure drop values on request.
Other sizes and connection types available on request.
Specific instructions for installation, use and maintenance are separately provided.

Design and dimensions shown may be changed without prior notice

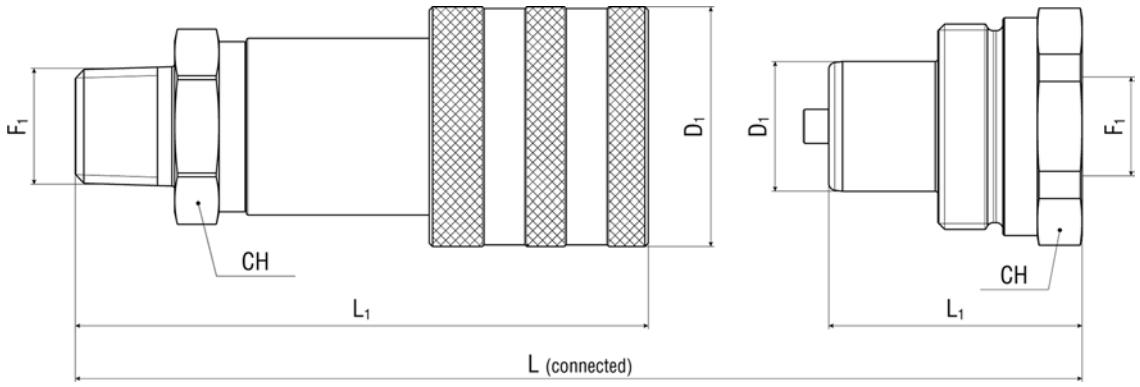

SCREW COUPLING - POPPET PTK

Female coupling - Male thread

Item Code				WP Conn.	BP Disconn.	Thread 1	F1	D1	CH	L1	L
	Dash	mm	inch	MPa	MPa			mm	mm	mm	mm
1233547	04	6,0	1/4"	70,0	280,0	NPTF	1/4-18	28,5	22,0	59,6	74,00
1233548	06	10,0	3/8"	70,0	280,0	NPTF	3/8-18	35,0	25,0	72,5	83,00

NPTF connection according to ANSI B1-20.3.

SCREW COUPLING - POPPET PTK

Male coupling - Female thread

Item Code				WP Conn.	BP Disconn.	Thread 1	F1	D1	CH	L1	L
	Dash	mm	inch	MPa	MPa			mm	mm	mm	mm
1233545	04	6,0	1/4"	70,0	280,0	NPTF	1/4-18	15,8	19,0	32,5	74,00
1233546	06	10,0	3/8"	70,0	280,0	NPTF	3/8-18	19,0	32,0	35,0	83,00

NPTF connection according to ANSI B1-20.3.

Design and dimensions shown may be changed without prior notice

SCREW COUPLING - POPPET PTK

Dust cap for female coupling

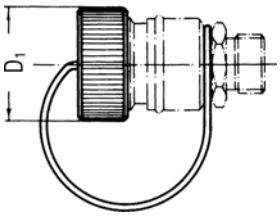

Item Code	Colour	Material				D1
			Dash	mm	inch	mm
1223688	BLK	PE	04	6,0	1/4"	23,0
1240287	BLK	PE	06	10,0	3/8"	27,0

SCREW COUPLING - POPPET PTK

Dust plug for male coupling

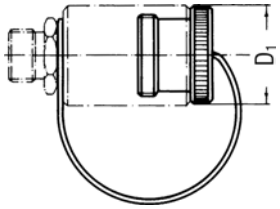

Item Code	Colour	Material				D1
			Dash	mm	inch	mm
1223690	BLK	PE	04	6,0	1/4"	25,0
1240288	BLK	PE	06	10,0	3/8"	30,0

Design and dimensions shown may be changed without prior notice

// MULTI-K

MULTI-COUPLING

TOP COAT

DN 10 to 13

to max WP 350 bar

// Tailor-made according to customer's needs
// Compact, reliable and safe

General features: ARGUS multi-couplings, which consist of a fixed and a mobile part, are developed following the specific needs of the user. The multi-connection plates are obtained from an anodized aluminium block as standard, and include the locations for flat-face couplings built of carbon steel with TOP COAT surface protection, but every component can be manufactured in different materials on request. The number of lines and possible electric or pneumatic connections can be defined depending on the application requirements. Connecting and disconnecting are carried out by means of a camleverage group with guiding pins, and a safety device is always present. Hose connections can be executed with threads of every type (e.g. BSP, NPT, SAE, metric) or also with the quick connect system "Plug-In Connector".

Note: a complete range of spare parts and accessories are available specific instructions for installation, use and maintenance are separately provided.

Design and dimensions shown may be changed without prior notice

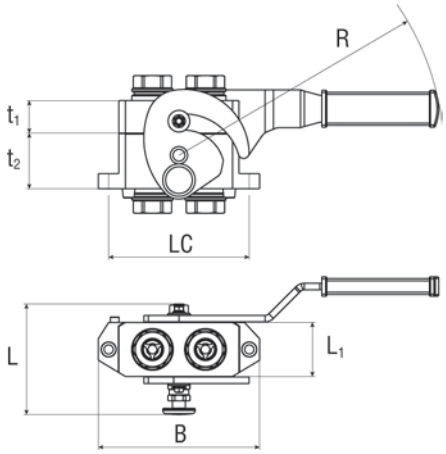

MULTI-K 2x3/8” AND MULTI-K 2x1/2”

Mobile male - Female thread

Item Code				WP Conn.	Thread 1	F1	Lines	t1	t2	LC	L1	L	B	R
	Dash	mm	inch	MPa				mm	mm	mm	mm	mm	mm	mm
1232490	06	10,0	3/8"	100,0	BSPP	3/8-19	2x3/8	30,0	-	130,0	50,0	102,00	149,0	245
1232492	08	13,0	1/2"	100,0	BSPP	1/2-14	2x1/2	30,0	-	130,0	50,0	102,00	149,0	245

Electric connection also available.

MULTI-K 2x3/8” AND MULTI-K 2x1/2”

Fixed female - Female thread

Item Code				WP Conn.	Thread 1	F1	Lines	t1	t2	LC	L1	L	B	R
	Dash	mm	inch	MPa				mm	mm	mm	mm	mm	mm	mm
1232491	06	10,0	3/8"	100,0	BSPP	3/8-19	2x3/8	-	51,0	130,0	50,0	102,00	149,0	245
1232493	08	13,0	1/2"	100,0	BSPP	1/2-14	2x1/2	-	51,0	130,0	50,0	102,00	149,0	245

Electric connection also available

Design and dimensions shown may be changed without prior notice

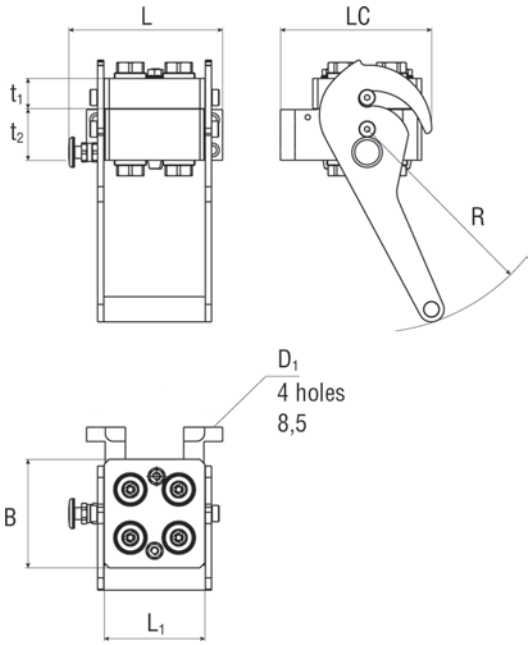

MULTI-K 4x3/8”Q AND MULTI-K 4x1/2”Q - 250 BAR

Mobile male - Female thread

Item Code				WP Conn.	Thread 1	F1	Lines	t1	t2	LC	L1	L	B	R
	Dash	mm	inch	MPa				mm	mm	mm	mm	mm	mm	mm
1232494	06	10,0	3/8"	100,0	BSPP	3/8-19	4x3/8	30,0	-	150,0	100,0	153,00	108,0	203
1232496	08	13,0	1/2"	100,0	BSPP	1/2-14	4x1/2	30,0	-	150,0	100,0	153,00	108,0	203

Electric connection also available.

MULTI-K 4x3/8”Q AND MULTI-K 4x1/2”Q - 250 BAR

Fixed female - Female thread

Item Code				WP Conn.	Thread 1	F1	Lines	t1	t2	LC	L1	L	B	R
	Dash	mm	inch	MPa				mm	mm	mm	mm	mm	mm	mm
1232495	06	10,0	3/8"	100,0	BSPP	3/8-19	4x3/8	-	51,0	150,0	100,0	153,00	108,0	203
1232497	08	13,0	1/2"	100,0	BSPP	1/2-14	4x1/2	-	51,0	150,0	100,0	153,00	108,0	203

Electric connection also available.

Design and dimensions shown may be changed without prior notice

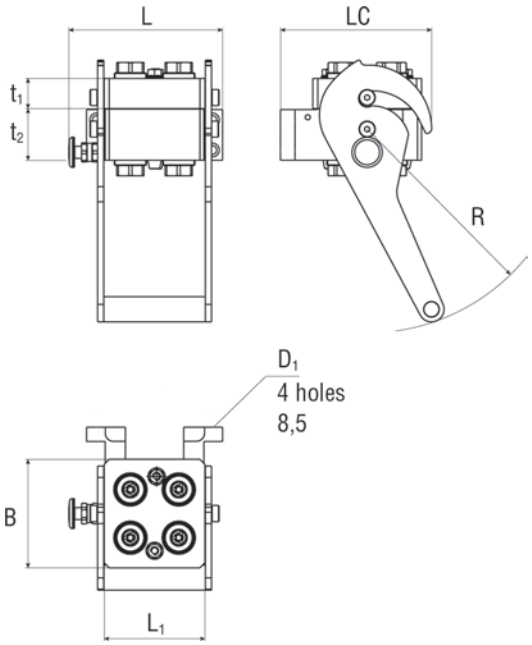

MULTI-K 4x3/8”Q AND MULTI-K 4x1/2”Q - 350 BAR

Mobile male - Female thread

Item Code				WP Conn.	Thread 1	F1	Lines	t1	t2	LC	L1	L	B	R
	Dash	mm	inch	MPa				mm	mm	mm	mm	mm	mm	mm
1245848	06	10,0	3/8"	100,0	BSPP	3/8-19	4x3/8	30,0	-	150,0	100,0	153,00	108,0	203
1245852	08	13,0	1/2"	100,0	BSPP	1/2-14	4x1/2	30,0	-	150,0	100,0	153,00	108,0	203

Electric connection also available.

MULTI-K 4x3/8”Q AND MULTI-K 4x1/2”Q - 350 BAR

Fixed female - Female thread

Item Code				WP Conn.	Thread 1	F1	Lines	t1	t2	LC	L1	L	B	R
	Dash	mm	inch	MPa				mm	mm	mm	mm	mm	mm	mm
1245849	06	10,0	3/8"	100,0	BSPP	3/8-19	4x3/8	-	51,0	150,0	100,0	153,00	108,0	203
1245853	08	13,0	1/2"	100,0	BSPP	1/2-14	4x1/2	-	51,0	150,0	100,0	153,00	108,0	203

Electric connection also available.

Design and dimensions shown may be changed without prior notice

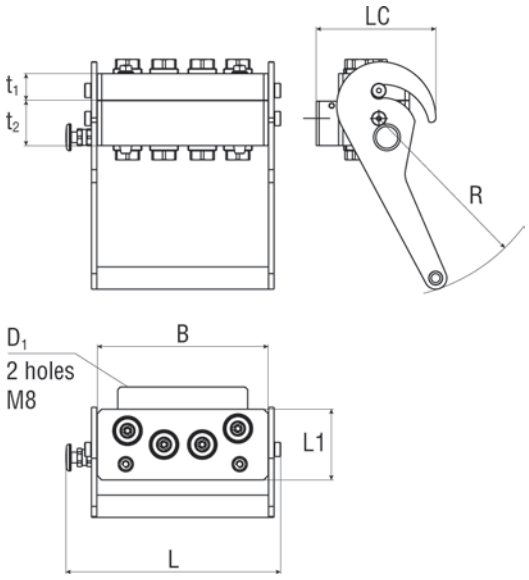

MULTI-K 4x3/8" AND MULTI-K 4x1/2"

Mobile male - Female thread

Item Code				WP Conn.	Thread 1	F1	Lines	t1	t2	LC	L1	L	B	R
	Dash	mm	inch	MPa				mm	mm	mm	mm	mm	mm	mm
1232311	06	10,0	3/8"	100,0	BSPP	3/8-19	4x3/8	30,0	-	134,0	79,6	241,00	192,0	203
1232498	08	13,0	1/2"	100,0	BSPP	1/2-14	4x1/2	30,0	-	134,0	79,6	241,00	192,0	203

Electric connection also available.

MULTI-K 4x3/8" AND MULTI-K 4x1/2"

Fixed female - Female thread

Item Code				WP Conn.	Thread 1	F1	Lines	t1	t2	LC	L1	L	B	R
	Dash	mm	inch	MPa				mm	mm	mm	mm	mm	mm	mm
1232190	06	10,0	3/8"	100,0	BSPP	3/8-19	4x3/8	-	51,0	134,0	79,6	241,00	192,0	203
1233704	08	13,0	1/2"	100,0	BSPP	1/2-14	4x1/2	-	51,0	134,0	85,0	241,00	192,0	203

Electric connection also available.

COMPATIBLE WITH DISTRIBUTORS:

- Walvoil SDM 143/DLM 142
- Nimco CV 452/462
- Nordhydraulic RMF 200

Design and dimensions shown may be changed without prior notice

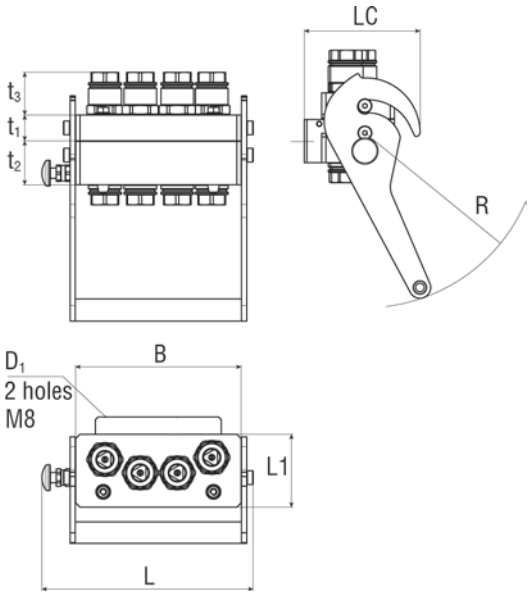

MULTI-K CPR 4x3/8” AND MULTI-K CPR 4x1/2”

Mobile male connectable under pressure - Female thread

Item Code				BP Conn.	Thread 1	F1	Lines	t1	t2	t3	LC	L1	L	B	R
	Dash	mm	inch	MPa				mm	mm	mm	mm	mm	mm	mm	mm
1235030	06	10,0	3/8"	100,0	BSPP	3/8-19	4x3/8	30,0	-	41,9	134,0	85,0	241,00	192,0	203
1233703	08	13,0	1/2"	100,0	BSPP	1/2-14	4x1/2	30,0	-	51,5	134,0	85,0	241,00	192,0	203

Design and dimensions shown may be changed without prior notice

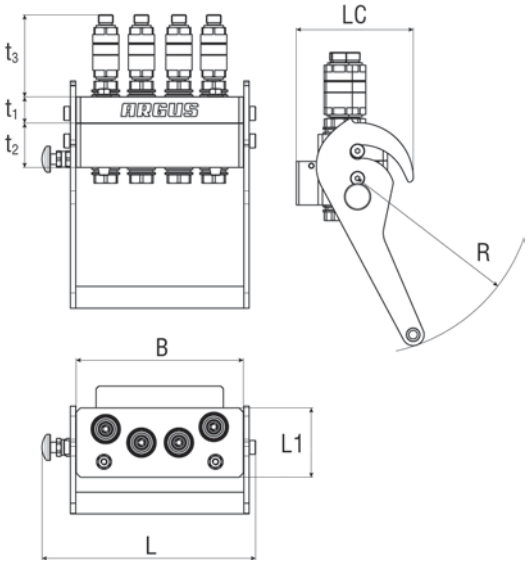

MULTI-K SWL 4x3/8” AND MULTI-K SWL 4x1/2”

Mobile male - Swivel connection on mobile - Female thread

Item Code				BP Conn.	Thread 1	F1	Lines	t1	t2	t3	LC	L1	L	B	R
	Dash	mm	inch	MPa				mm	mm	mm	mm	mm	mm	mm	mm
1235023	06	10,0	3/8"	100,0	BSPP	3/8-19	4x3/8	30,0	-	97,7	134,0	79,6	241,00	192,0	203
1235024	08	13,0	1/2"	100,0	BSPP	1/2-14	4x1/2	30,0	-	103,5	134,0	79,6	241,00	192,0	203

Design and dimensions shown may be changed without prior notice

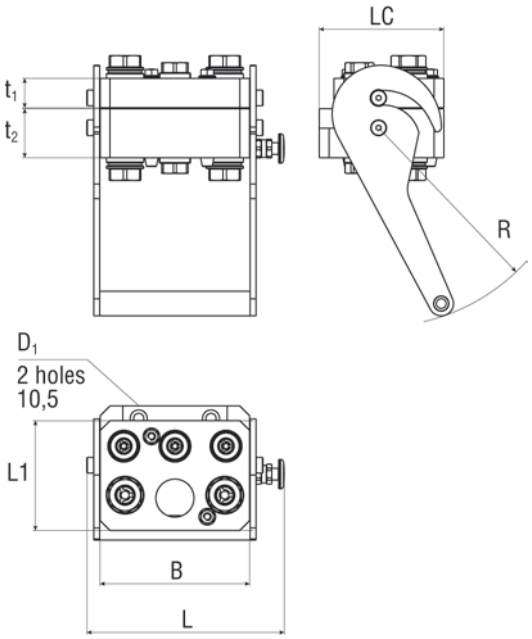

MULTI-K 3X3/8”AND MULTI-K 2X1/2”

Mobile male - Female thread

Item Code				WP Conn.	Thread 1	F1	Lines	t1	t2	LC	L1	L	B	R
	Dash	mm	inch	MPa				mm	mm	mm	mm	mm	mm	mm
1232500	06	10,0	3/8"	100,0	BSPP	3/8-19	3x3/8+2x1/2	30,0	-	127,0	112,0	201,00	152,0	203

Electric connection also available.

MULTI-K 3x3/8”AND MULTI-K 2x1/2”

Fixed female - Female thread

Item Code				WP Conn.	Thread 1	F1	Lines	t1	t2	LC	L1	L	B	R
	Dash	mm	inch	MPa				mm	mm	mm	mm	mm	mm	mm
1232501	08	13,0	1/2"	100,0	BSPP	1/2-14	3x3/8+2x1/2	-	50,0	127,0	112,0	201,00	152,0	203

Electric connection also available.

Design and dimensions shown may be changed without prior notice

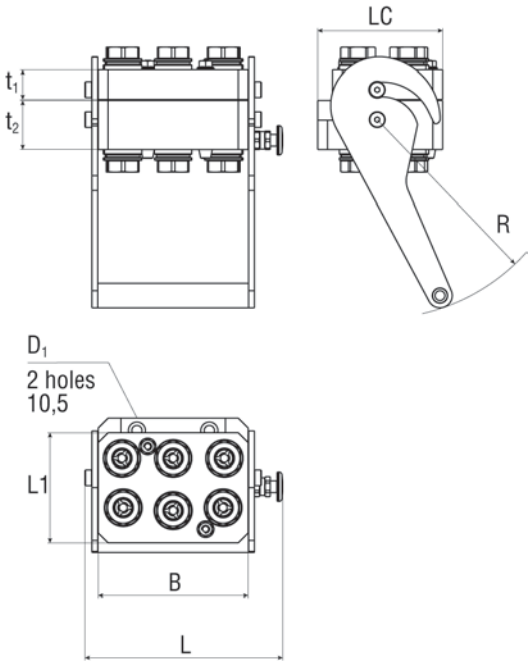

MULTI-K 6x3/8” AND MULTI-K 6x1/2”

Mobile male - Female thread

Item Code				WP Conn.	Thread 1	F1	Lines	t1	t2	LC	L1	L	B	R
	Dash	mm	inch	MPa				mm	mm	mm	mm	mm	mm	mm
1232502	06	10,0	3/8"	100,0	BSPP	3/8-19	6x3/8	30,0	-	127,0	112,0	201,00	152,0	203
1232504	08	13,0	1/2"	100,0	BSPP	1/2-14	6x1/2	30,0	-	127,0	112,0	201,00	152,0	203

Electric connection also available.

MULTI-K 6x3/8” AND MULTI-K 6x1/2”

Fixed female - Female thread

Item Code				WP Conn.	Thread 1	F1	Lines	t1	t2	LC	L1	L	B	R
	Dash	mm	inch	MPa				mm	mm	mm	mm	mm	mm	mm
1232503	06	10,0	3/8"	100,0	BSPP	3/8-19	6x3/8	-	50,0	127,0	112,0	201,00	152,0	203
1232505	08	13,0	1/2"	100,0	BSPP	1/2-14	6x1/2	-	50,0	127,0	112,0	201,00	152,0	203

Electric connection also available.

Design and dimensions shown may be changed without prior notice

// SPARE PARTS

TECHNICAL DETAILS

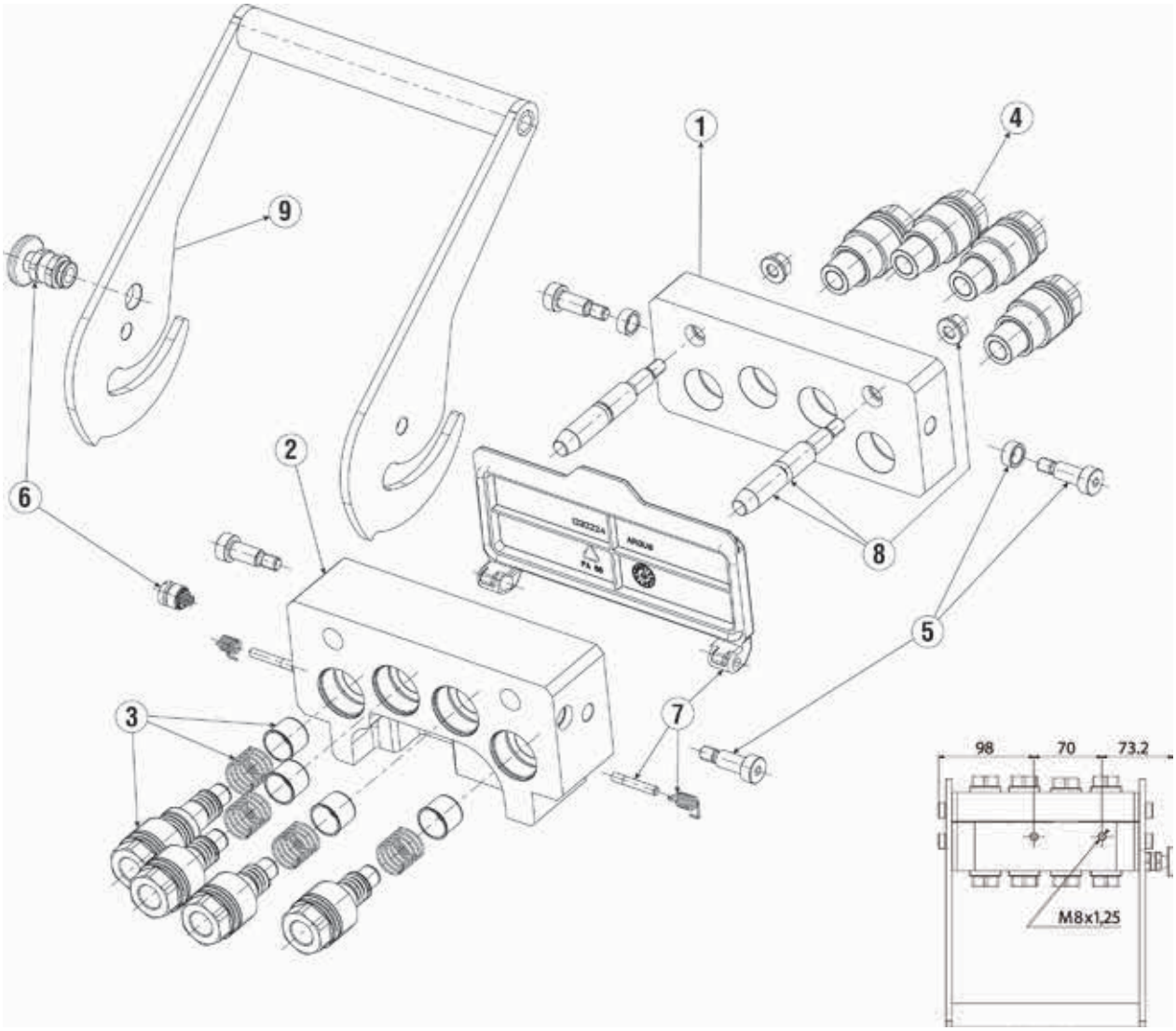

Pos.	Description	Multi-k 4x3/8"	Multi-k 4x1/2"
		Part Number	Part Number
1	Mobile plate	1232208	1236572
2	Fixed plate	1232209	1233705
3	Female coupling	1232275	1233168
4	Male coupling	1232278	1236574
5	Screw group	1232282	1232282
6	Safetely lock group	1232280	1232280
7	Cover group	1232276	1232276
8	Guide pin group	1232281	1232281
9	Lever group	1233171	1233171

COMPONENTS AND MATERIALS

- Mobile and fixed plate in anodized aluminium 6082
- Quick release coupling in steel with galvanic protection
- Seal and back-up ring in NBR and PTFE
- Springs according to EN 102070-1
- Lock lever in steel with galvanic protection
- Safetely block in steel and aluminium

Design and dimensions shown may be changed without prior notice

// RV

NON RETURN VALVE

TOP COAT

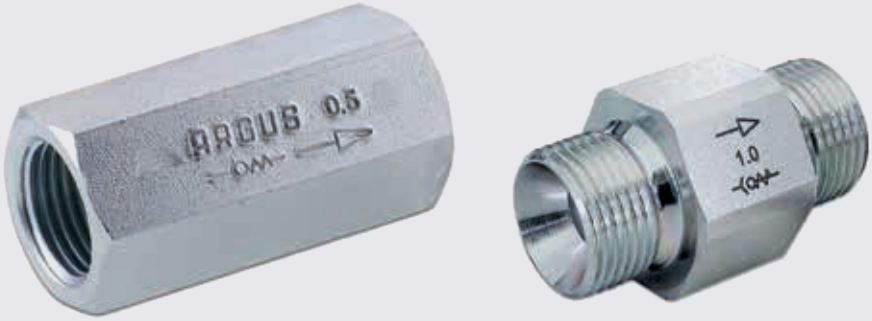

DN 6 to 25

to max WP 400 bar

// One-piece housing
// Low pressure drop

General features: non return valves enable a flow in one direction and block it in the opposite direction. They therefore belong to the group of check valves (DIN 24300). ARGUS non return valves guarantee an extremely low-resistant flow through their streamlined internal parts. The valves are sealed by spring-hydraulic poppets and washer. Stroke limitation ensures free outlet opening. Depending on opening pressure, they can also be used as a suction and safety valve.

Materials: galvanized steel housing and poppet valve - Brass housing also available - Brass valve stem guide - TPE seals (PTFE optional). Top Coat Cr-III zinc plating with additional trivalent passivation for outstanding surface protection.

Application: suitable for liquid lines with mineral oil-based hydraulic fluids to DIN 51524 and DIN 51525. Also available for flame-resistant hydraulic fluids to VDMA 24317, for pneumatics and water hydraulics in appropriate materials on request.

Temperature range:
-30 °C +125 °C

Viscosity range: to 400 cSt (53 °E)

Note: specific instructions for installation, use and maintenance are separately provided.

Symbol:

Design and dimensions shown may be changed without prior notice

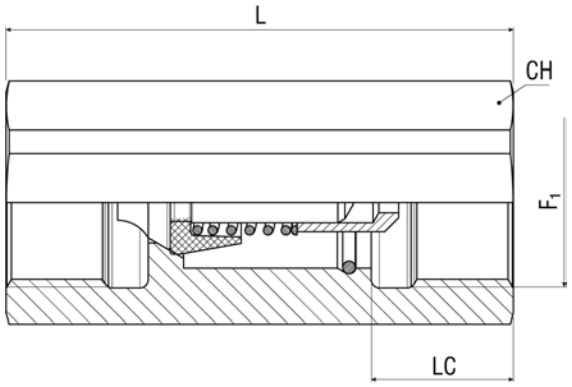

NON RETURN VALVE - RV

Female thread

Item Code				WP	Opening press.	Thread 1P	F1	CH	LC	L
	Dash	mm	in	bar	bar		mm	mm	mm	mm
1232166	04	6	1/4"	400	0,50	BSPP	1/4-19	19,0	14,0	50,0
1232156	04	6	1/4"	400	2,00	BSPP	1/4-19	19,0	14,0	50,0
1232157	04	6	1/4"	400	4,00	BSPP	1/4-19	19,0	14,0	50,0
1219731	06	10	3/8"	400	0,50	BSPP	3/8-19	22,0	14,0	50,0
1228914	06	10	3/8"	400	0,50	MET	M16X1.5	22,0	14,0	50,0
1232158	06	10	3/8"	400	2,00	BSPP	3/8-19	22,0	14,0	50,0
1232159	06	10	3/8"	400	4,00	BSPP	3/8-19	22,0	14,0	50,0
1219730	08	13	1/2"	315	0,50	BSPP	1/2-14	27,0	16,0	57,0
1228915	08	13	1/2"	315	0,50	MET	M22X1.5	27,0	16,0	57,0
1232160	08	13	1/2"	315	2,00	BSPP	1/2-14	27,0	16,0	57,0
1232161	08	13	1/2"	315	4,00	BSPP	1/2-14	27,0	16,0	57,0
1232167	12	19	3/4"	250	0,50	BSPP	3/4-14	36,0	16,0	65,0
1232162	12	19	3/4"	250	2,00	BSPP	3/4-14	36,0	16,0	65,0
1232163	12	19	3/4"	250	4,00	BSPP	3/4-14	36,0	16,0	65,0
1228917	16	25	1"	250	0,50	BSPP	1-11	41,0	18,0	73,0
1228918	16	25	1"	250	0,50	MET	M30X1.5	41,0	18,0	73,0
1232164	16	25	1"	250	2,00	BSPP	1-11	41,0	18,0	73,0
1232165	16	25	1"	250	4,00	BSPP	1-11	41,0	18,0	73,0

BSPP connection according to DIN 3852-2-X, metric connection according to DIN 3852.

Design and dimensions shown may be changed without prior notice

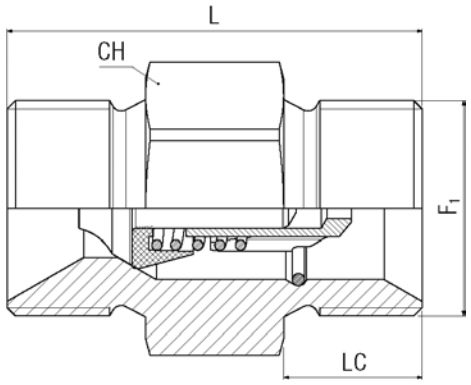

NON RETURN VALVE - RV

Male thread

Item Code				WP	Opening press.	Thread 1P	F1	CH	LC	L
	Dash	mm	in	bar	bar		mm	mm	mm	mm
1242221	06	10	3/8"	350	1,00	BSPP	3/8-19	22,0	12,0	40,0
1242225	06	10	3/8"	350	3,00	BSPP	3/8-19	22,0	12,0	40,0
1242598	06	10	3/8"	350	6,00	BSPP	3/8-19	22,0	12,0	40,0
1242227	08	13	1/2"	350	1,00	BSPP	1/2-14	27,0	14,0	44,0
1242231	08	13	1/2"	350	3,00	BSPP	1/2-14	27,0	14,0	44,0
1242600	08	13	1/2"	350	6,00	BSPP	1/2-14	27,0	14,0	44,0
1242233	12	19	3/4"	350	1,00	BSPP	3/4-14	32,0	17,0	51,0
1242234	12	19	3/4"	350	3,00	BSPP	3/4-14	32,0	17,0	51,0
1242601	12	19	3/4"	350	6,00	BSPP	3/4-14	32,0	17,0	51,0
1242612	16	25	1"	320	1,00	BSPP	1-11	40,0	19,5	65,0
1242615	16	25	1"	320	3,00	BSPP	1-11	40,0	19,5	65,0
1242617	16	25	1"	320	6,00	BSPP	1-11	40,0	19,5	65,0
1242236	20	32	1 1/4"	320	1,00	BSPP	1 1/4-11	50,0	21,0	76,0
1242237	20	32	1 1/4"	320	6,00	BSPP	1 1/4-11	50,0	21,0	76,0
1242605	20	32	1 1/4"	320	9,00	BSPP	1 1/4-11	50,0	21,0	76,0
1242620	24	38	1 1/2"	320	1,00	BSPP	1 1/2-11	55,0	22,0	80,0
1242621	24	38	1 1/2"	320	6,00	BSPP	1 1/2-11	55,0	22,0	80,0
1242622	24	38	1 1/2"	320	9,00	BSPP	1 1/2-11	55,0	22,0	80,0

BSPP connection according to DIN 3852-2-X

Design and dimensions shown may be changed without prior notice

// PRV

CARTRIDGE NON RETURN VALVE

TOP COAT

DN 6 to 25

to max WP 400 bar

// One-piece housing
// Low pressure drop

General features: ARGUS PRV cartridge non return valves are designed for direct installation into device or machine housings. They enable a flow in one direction and block it in the opposite direction. They therefore belong to the group of check valves (DIN 24300). ARGUS PRV cartridge non return valves ensure particularly low-resistance flow through their streamlined internal parts. The valves are sealed by spring-loaded poppets and washer. Stroke limitation ensures free outlet opening. Depending on opening pressure, they can also be used as suction and safety valves.

Materials: gunmetal housing, galvanized steel valve - Brass valve stem guide - Steel spring compression spring - TPE seals (PTFE optional). Cr-III zinc plating through additional passivation for improved surface protection.

Application: suitable for liquid lines with mineral oil-based hydraulic fluids to DIN 51524 and DIN 51525. Also available for flame-resistant hydraulic fluids to VDMA 24317, for pneumatics and water hydraulics in appropriate materials on request.

Temperature range:
-30 °C +100 °C

Viscosity range: to 400 cSt (53 °E)

Note: customised versions of cartridge non return valves. Argus can develop check valves according to customer's needs or specifications.
Specific instructions for installation, use and maintenance are separately provided.

Symbol:

Design and dimensions shown may be changed without prior notice

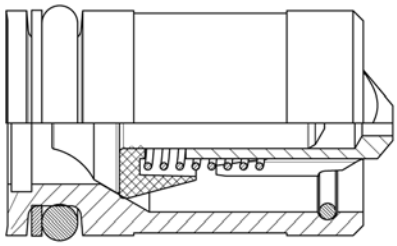

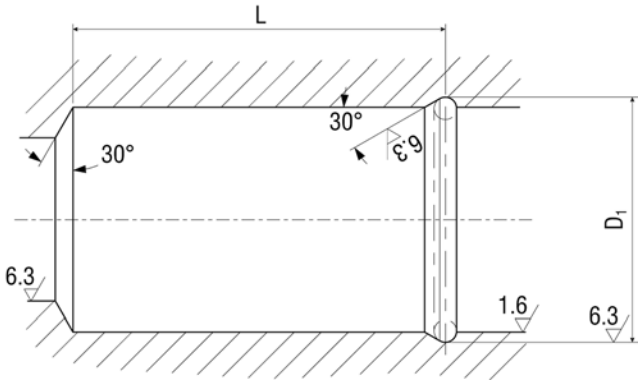

NON RETURN VALVE - PRV

Cartridge

Item Code				WP	Opening press.	D1	L
	Dash	mm	in	bar	bar	mm	mm
1228905	04	6	1/4"	400	0,50	16,0	30,2
1219732	06	10	3/8"	315	0,50	22,0	36,5
1228906	05	16	5/8"	315	0,50	32,0	50,7
1228907	16	25	1"	315	0,50	50,0	72,0

SPECIAL ITEMS

Customized versions of cartridge non return valves. ARGUS can develop check valves according to customer's needs or specifications.

MIL Standard

Design and dimensions shown may be changed without prior notice

// LBS

EXCESS FLOW CHECK VALVE

TOP COAT

DN 6 to 16

to max WP 400 bar

// One-piece housing
// Low pressure drop

General features: ARGUS LBS excess flow check valves are installed in systems to prevent the medium escaping through line breaks. Under normal operation, they are open and installed near to a tank or cylinder to be protected. They close if excess flow speeds occur. Each excess flow check valve is rated for maximum flow speed. The excess flow check valve is held in the OPEN position by a compression spring. If the spring pre-tension is exceeded, the poppet valve moves in the valve seat and closes the line. Outside influences, e.g. sudden movements, impact on moving devices, installed position, can create axial forces and thereby changes in the closing volume. If the user is unable to prevent from such influences, system tests must be run. The excess flow check valve has to be installed as close as possible to the component to be protected (tank or cylinder), whereby high flow resistances between the element to be protected and the excess flow check valve are to be prevented.

Materials: galvanized steel housing and poppet valve - Brass valve stem guide - Steel spring compression spring. Top Coat Cr-III zinc plating with additional trivalent passivation for outstanding surface protection.

Application: suitable for liquid lines with mineral oil-based hydraulic fluids to DIN 51524 and DIN 51525. Also available for flame-resistant hydraulic fluids to VDMA 24317, for pneumatics and water hydraulics in appropriate materials on request.

Temperature range:
-30 °C +125 °C

Viscosity range: to 400 cSt (53 °E)

Note: other closing volumes and connection types on request. Specific instructions for installation, use and maintenance are separately provided.

Symbol:

Design and dimensions shown may be changed without prior notice

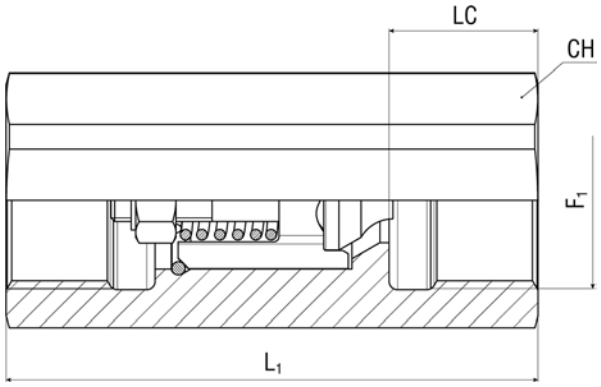

EXCESS FLOW CHECK VALVE - LBS

Female thread

Item Code				WP	Closing Vol.	Thread 1P	F1	CH	LC	L
	Dash	mm	in	bar	l/min		mm	mm	mm	mm
1228908	04	6	1/4"	400	40	BSPP	3/8-19	22,0	14,0	50,0
1228909	04	6	1/4"	400	40	MET	M16X1.5	22,0	14,0	50,0
1228911	06	10	3/8"	315	90	MET	M22X1.5	27,0	16,0	57,0
1228910	06	10	3/8"	315	90	BSPP	1/2-14	27,0	16,0	57,0
1228912	16	25	1"	250	200	MET	M30X1.5	36,0	18,0	73,0
1240656	16	25	1"	250	200	BSPP	1-11	41,0	18,0	73,0

Design and dimensions shown may be changed without prior notice

// SWIVEL CONNECTOR

SWIVEL JOINT

TOP COAT

DN 10 to 51

to max WP 410 bar

// Extremely low torque for rotation under pressure
// Robust, compact and lightweight
// Outstanding wear resistance
// Long-lasting service life

General features: ALFAGOMMA state-of-the-art Swivel Connector range is specifically designed to withstand the most severe working conditions and to ensure the best performances in the harshest environments up to 350 bar operating pressure. Its innovative ball bearing-less swivel system guarantees long lasting reliability to the hydraulic system, increasing productivity without fluid leakages. The ball bearing-less inner mechanism ensures a consistent rotary movement within the system and prevents damaging torsions to the hose. The result is an increase in components service life and lower operating costs due to easier & inexpensive maintenance. Alfagomma swivel connectors have a compact design, which makes them suitable for use in the smallest of spaces. Thanks to our exclusive TOP COAT -Galvanic Coating- proprietary technology, the complete range of Alfagomma swivel connectors can boast an outstanding wear and corrosion resistance, so as to guarantee a longer lifespan to your hydraulic system.

Materials: high strength carbon steel with TOP COAT surface protection. HNBR and PTFE seals and bushings.

Temperature range:
-35 °C +120 °C

Design and dimensions shown may be changed without prior notice

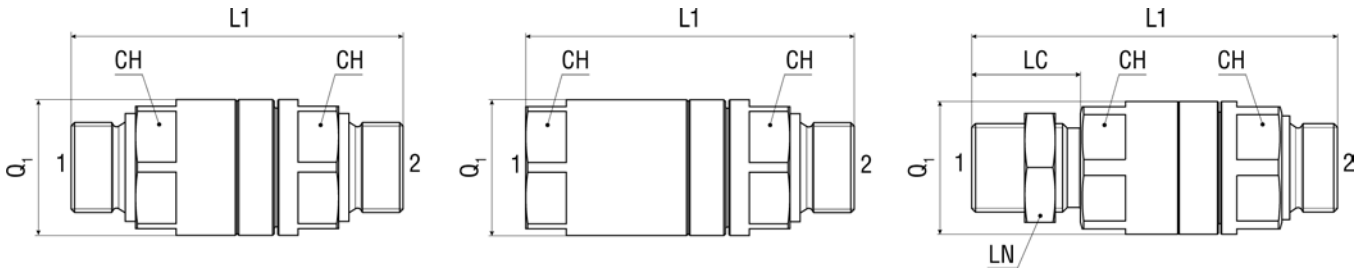

SWIVEL CONNECTOR

BSPP

Item Code	ID Dash	Conn. 1	Port 1	ID1 mm	F1	Port 2	ID2 mm	F2	CH mm	LN mm	L mm	Q1 mm
1233386	06	Bulk Head	BSPP	10	3/8-19	BSPP	10	3/8-19	27,0	22,0	105,0	30,0
1233387	08	Bulk Head	BSPP	10	1/2-14	BSPP	10	1/2-14	27,0	27,0	108,5	30,0
1233388	12	Bulk Head	BSPP	16	3/4-14	BSPP	16	3/4-14	41,0	36,0	130,0	46,0
1233389	16	Bulk Head	BSPP	22	1-11	BSPP	22	1-11	50,0	41,0	147,0	56,0
1233390	24	Bulk Head	BSPP	32	1 1/2-11	BSPP	32	1 1/2-11	70,0	55,0	187,0	75,0
1235068	06	Solid Female	BSPP	10	3/8-19	BSPP	10	3/8-19	-	-	-	-
1233383	08	Solid Female	BSPP	10	1/2-14	BSPP	10	1/2-14	27,0	-	90,2	30,0
1233384	12	Solid Female	BSPP	16	3/4-14	BSPP	16	3/4-14	41,0	-	103,0	46,0
1233385	16	Solid Female	BSPP	22	1-11	BSPP	22	1-11	50,0	-	119,0	56,0
1234984	20	Solid Female	BSPP	22	1 1/4-11	BSPP	22	1 1/4-11	50,0	-	119,0	56,0
1240261	24	Solid Female	BSPP	32	1 1/2-11	BSPP	32	1 1/2-11	70,0	-	157,0	75,0
1233377	06	Solid Male	BSPP	10	3/8-19	BSPP	10	3/8-19	27,0	-	86,2	30,0
1233378	08	Solid Male	BSPP	10	1/2-14	BSPP	10	1/2-14	27,0	-	86,2	30,0
1233379	12	Solid Male	BSPP	16	3/4-14	BSPP	16	3/4-14	41,0	-	109,0	46,0
1233380	16	Solid Male	BSPP	22	1-11	BSPP	22	1-11	50,0	-	124,0	56,0
1234983	20	Solid Male	BSPP	22	1 1/4-11	BSPP	22	1 1/4-11	50,0	-	126,0	56,0
1233381	24	Solid Male	BSPP	32	1 1/2-11	BSPP	32	1 1/2-11	70,0	-	157,0	75,0

Design and dimensions shown may be changed without prior notice

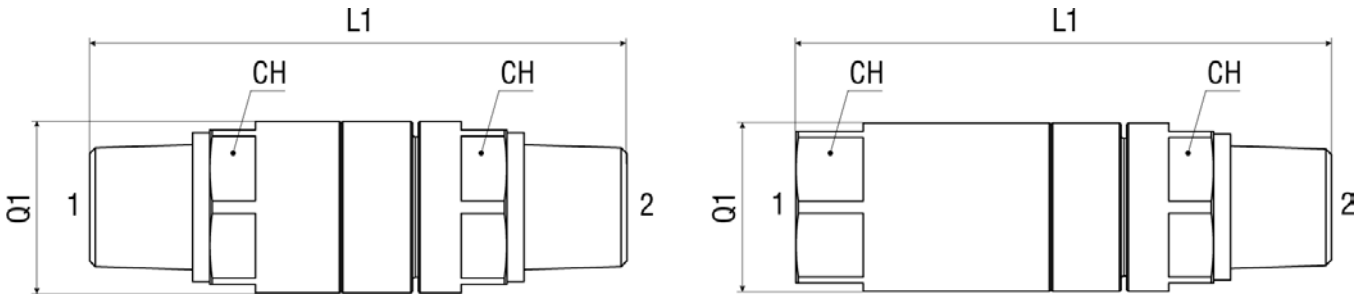

SWIVEL CONNECTOR

NPTF

Item Code	ID Dash	Conn. 1	Port 1	ID1 mm	F1	Port 2	ID2 mm	F2	CH mm	L mm	Q1 mm
1233817	08	Solid Female	NPTF	10	1/2-14	NPTF	10	1/2-14	27,0	95,7	30,0
1233816	08	Solid Male	NPTF	10	1/2-14	NPTF	10	1/2-14	27,0	94,2	30,0

Design and dimensions shown may be changed without prior notice

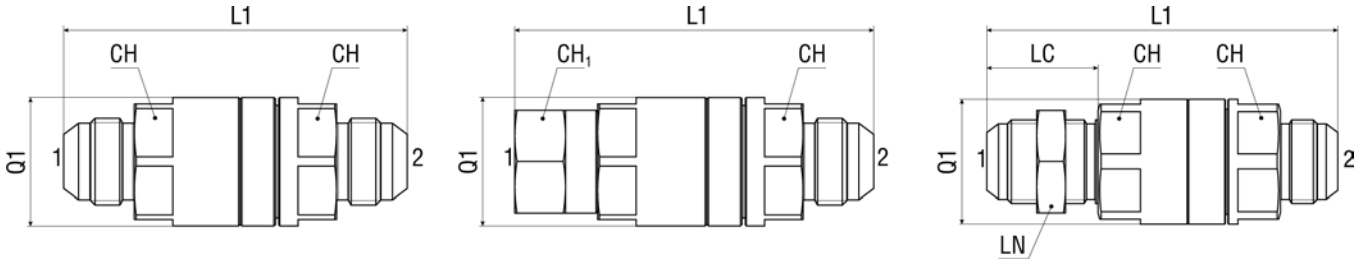

SWIVEL CONNECTOR

JIC

Item Code	ID Dash	Conn. 1	Port 1	ID1 mm	F1	Port 2	ID2 mm	F2	LC mm	CH mm	CH1 mm	LN mm	L mm	Q1 mm
1233399	08	Bulk Head	JIC	10	3/4-16	JIC	10	3/4-16	36,5	27,0	-	24,0	114,0	30,0
1233400	10	Bulk Head	JIC	16	7/8-14	JIC	16	7/8-14	40,0	41,0	-	30,0	136,5	46,0
1233401	12	Bulk Head	JIC	16	1 1/16-12	JIC	16	1 1/16-12	44,5	41,0	-	36,0	143,5	46,0
1233402	16	Bulk Head	JIC	22	1 5/16-12	JIC	22	1 5/16-12	44,5	50,0	-	41,0	154,9	56,0
1233395	08	Solid Female	JIC	10	3/4-16	JIC	10	3/4-16	-	27,0	25,0	-	100,0	30,0
1233396	10	Solid Female	JIC	16	7/8-14	JIC	16	7/8-14	-	41,0	27,0	-	119,7	46,0
1233397	12	Solid Female	JIC	16	1 1/16-12	JIC	16	1 1/16-12	-	41,0	32,0	-	122,8	46,0
1233398	16	Solid Female	JIC	22	1 5/16-12	JIC	22	1 5/16-12	-	50,0	38,0	-	139,6	56,0
1233391	08	Solid Male	JIC	10	3/4-16	JIC	10	3/4-16	-	27,0	-	-	93,7	30,0
1233392	10	Solid Male	JIC	16	7/8-14	JIC	16	7/8-14	-	41,0	-	-	115,0	46,0
1233393	12	Solid Male	JIC	16	1 1/16-12	JIC	16	1 1/16-12	-	41,0	-	-	120,0	46,0
1233394	16	Solid Male	JIC	22	1 5/16-12	JIC	22	1 5/16-12	-	50,0	-	-	134,5	56,0

Design and dimensions shown may be changed without prior notice

SWIVEL CONNECTOR

ORFS

Item Code	ID Dash	Conn. 1	Port 1	ID1 mm	F1	Port 2	ID2 mm	F2	LC mm	CH mm	CH1 mm	LN mm	L mm	Q1 mm
1233411	08	Bulk Head	ORFS	10	13/16-16	ORFS	10	13/16-16	36,5	27,0	-	30,0	108,5	30,0
1233412	10	Bulk Head	ORFS	16	1-14	ORFS	16	1-14	40,5	41,0	-	36,0	132,0	46,0
1233413	12	Bulk Head	ORFS	16	1 3/16-12	ORFS	16	1 3/16-12	41,5	41,0	-	41,0	134,5	46,0
1233414	16	Bulk Head	ORFS	22	1 7/16-12	ORFS	22	1 7/16-12	42,0	50,0	-	46,0	148,0	56,0
1233403	08	Solid Male	ORFS	10	13/16-16	ORFS	10	13/16-16	-	27,0	-	-	84,7	30,0
1233404	10	Solid Male	ORFS	16	1-14	ORFS	16	1-14	-	41,0	-	-	107,0	46,0
1233405	12	Solid Male	ORFS	16	1 3/16-12	ORFS	16	1 3/16-12	-	41,0	-	-	110,0	46,0
1233406	16	Solid Male	ORFS	22	1 7/16-12	ORFS	22	1 7/16-12	-	50,0	-	-	123,5	56,0
1233407	08	Swivel Female	ORFS	10	13/16-16	ORFS	10	13/16-16	-	27,0	27,0	-	95,0	30,0
1233408	10	Swivel Female	ORFS	16	1-14	ORFS	16	1-14	-	41,0	30,0	-	116,0	46,0
1233409	12	Swivel Female	ORFS	16	1 3/16-12	ORFS	16	1 3/16-12	-	41,0	36,0	-	120,0	46,0
1233410	16	Swivel Female	ORFS	22	1 7/16-12	ORFS	22	1 7/16-12	-	50,0	41,0	-	135,0	56,0

Design and dimensions shown may be changed without prior notice

// FLOW RATE TABLE

// SVK-1H-ISO-A

POPPET STANDARD ISO 7241 A

DN 6 TO 40

TO MAX. WP 140 BAR

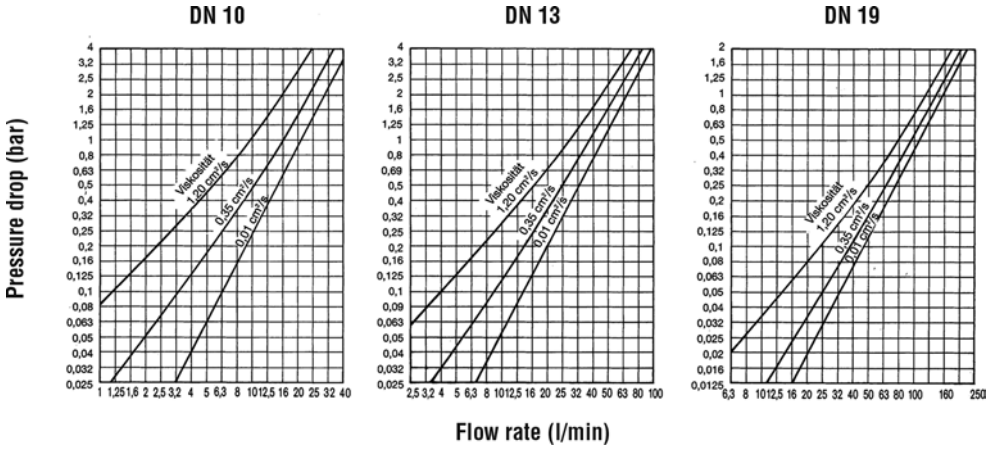

Design and dimensions shown may be changed without prior notice

// SVK-1H

POPPET STANDARD ISO 5675

DN 8 TO 19

TO MAX. WP 400 BAR

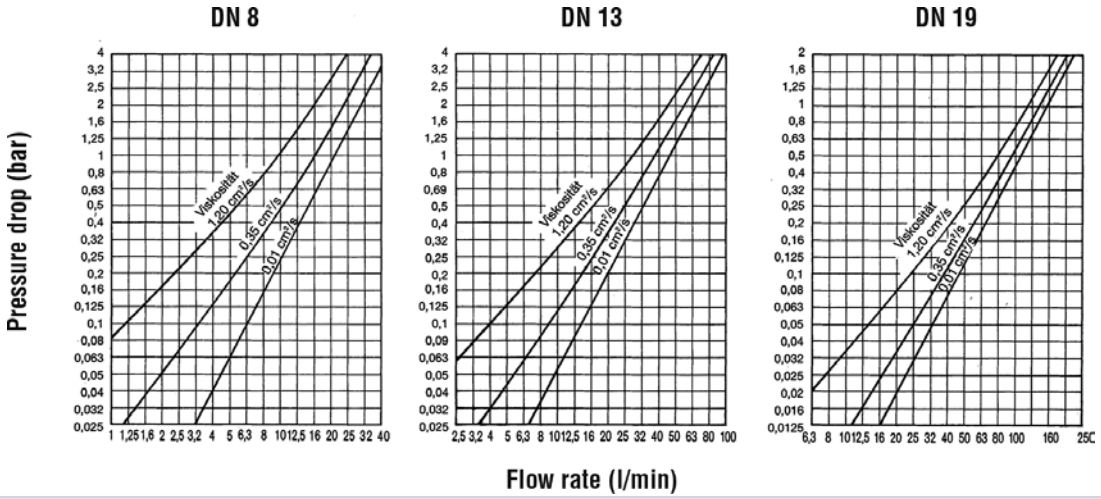

// FPK

FLAT FACE STANDARD ISO 16028

DN 6 TO 25

TO MAX. WP 350 BAR

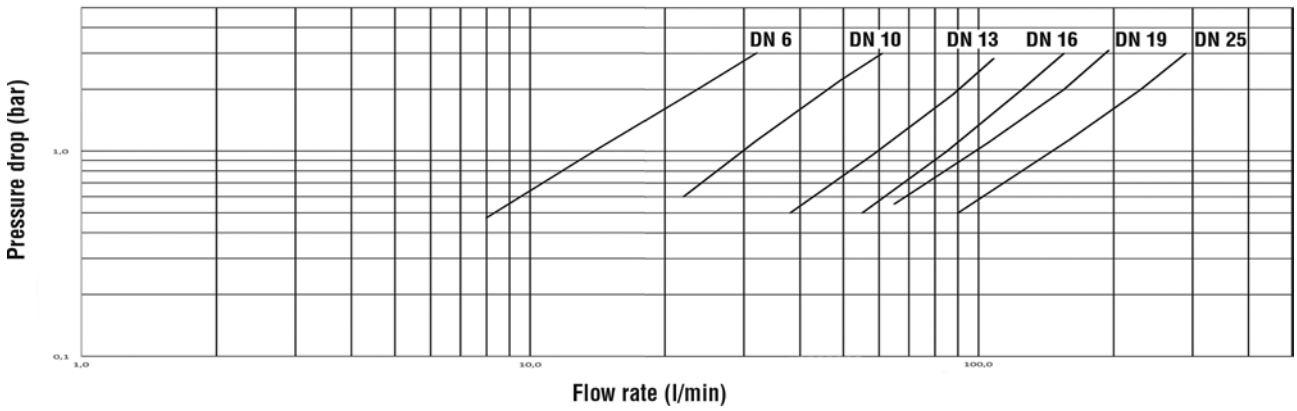

Design and dimensions shown may be changed without prior notice

// HDK

SCREW TYPE POPPET STANDARD ISO 14541

DN 8 TO 32

TO MAX. WP 450 BAR

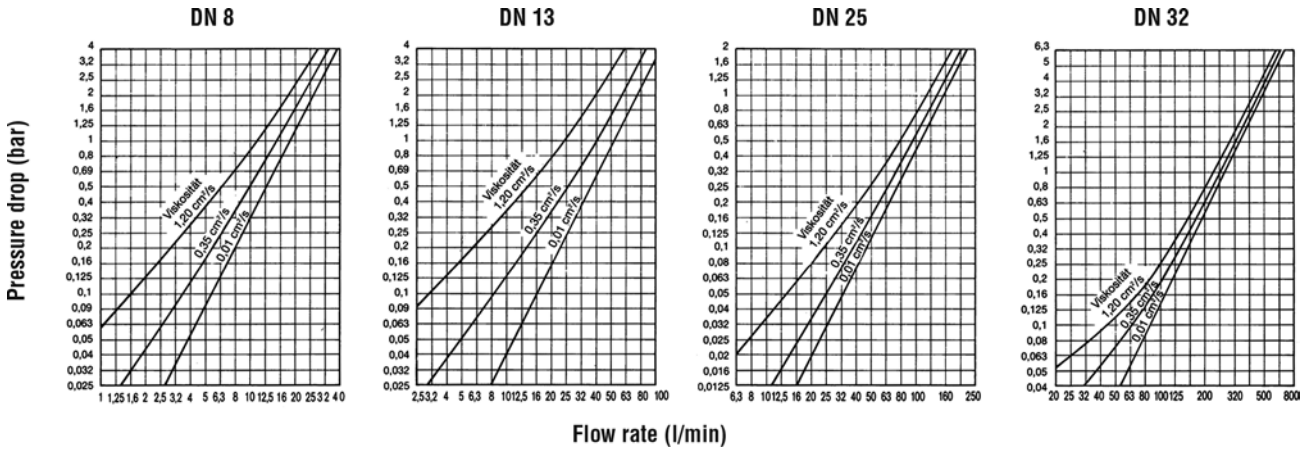

// RK

SCREW TYPE FLAT FACE

DN 10 TO 25

TO MAX. WP 315 BAR

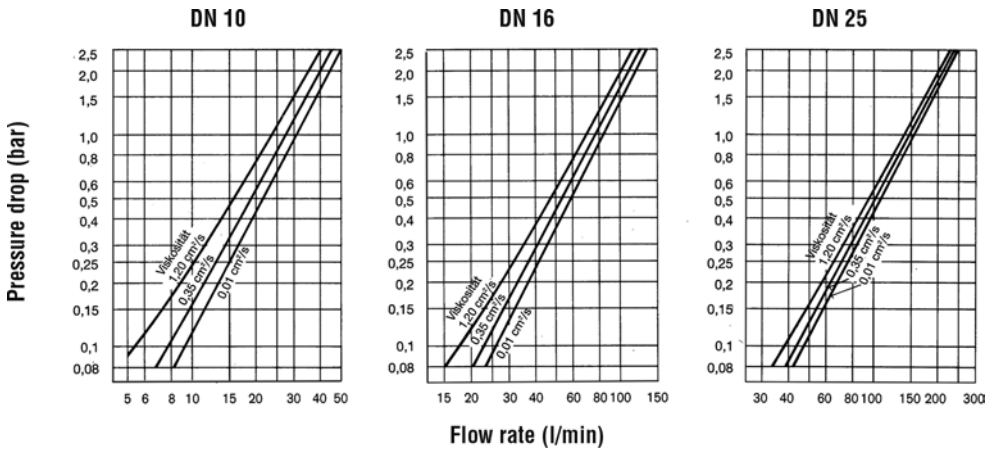

Design and dimensions shown may be changed without prior notice

// RKN

SCREW TYPE FLAT FACE

DN 10 TO 25

TO MAX. WP 150 BAR

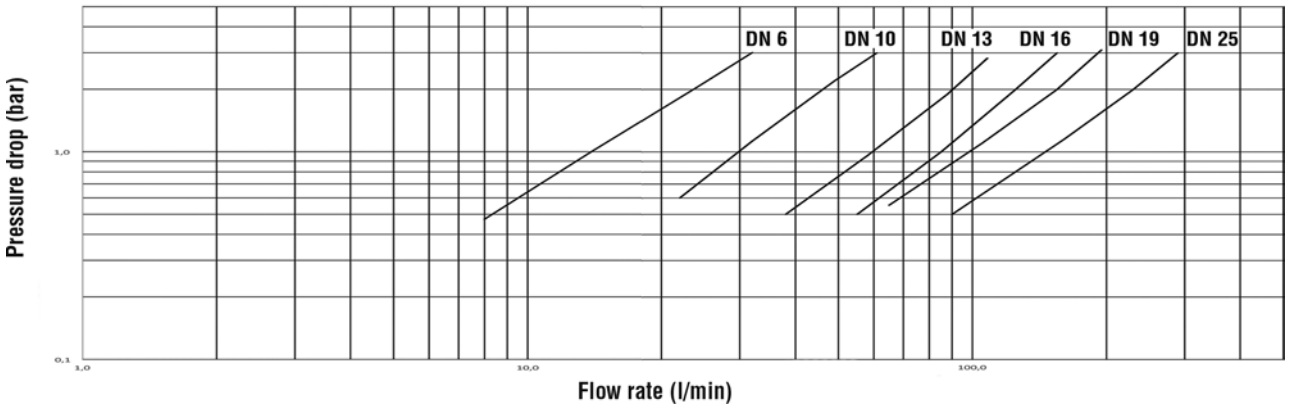

// AK

SCREW TYPE FLAT FACE

DN 10 TO 16

TO MAX. WP 315 BAR

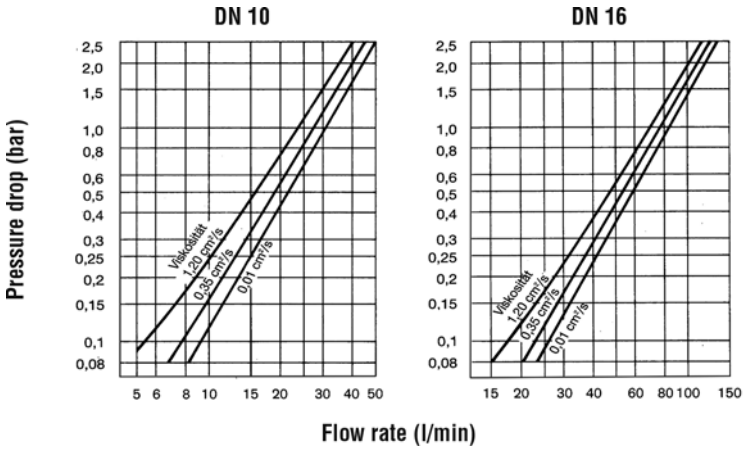

Design and dimensions shown may be changed without prior notice

// RV

NON RETURN VALVE

DN 6 TO 25

TO MAX. WP 400 BAR

FLOW RESISTANCE WITH 35 CM²/S HYDRAULIC OIL

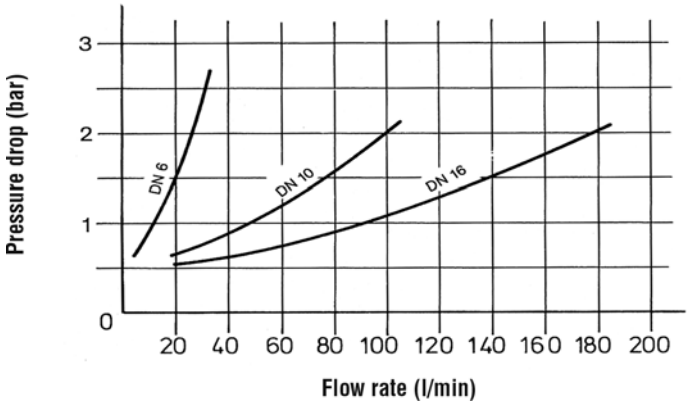

// PRV

CARTRIDGE NON RETURN VALVE

DN 6 TO 25

TO MAX. WP 400 BAR

FLOW RESISTANCE WITH 35 CM²/S HYDRAULIC OIL

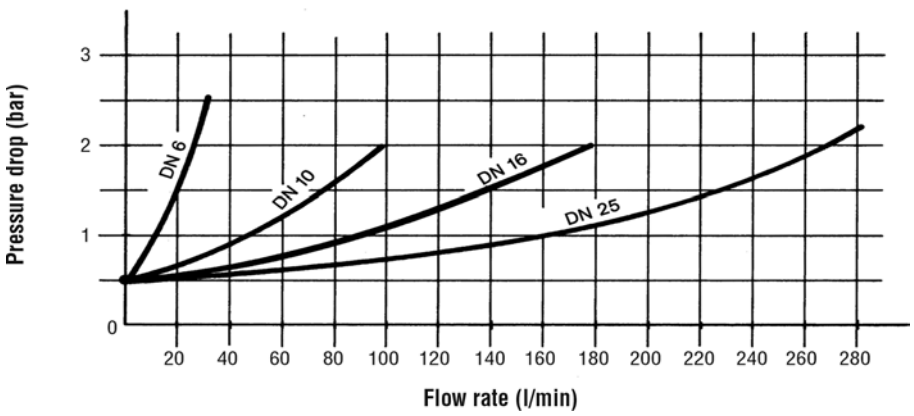

// NOTE

// NOTE

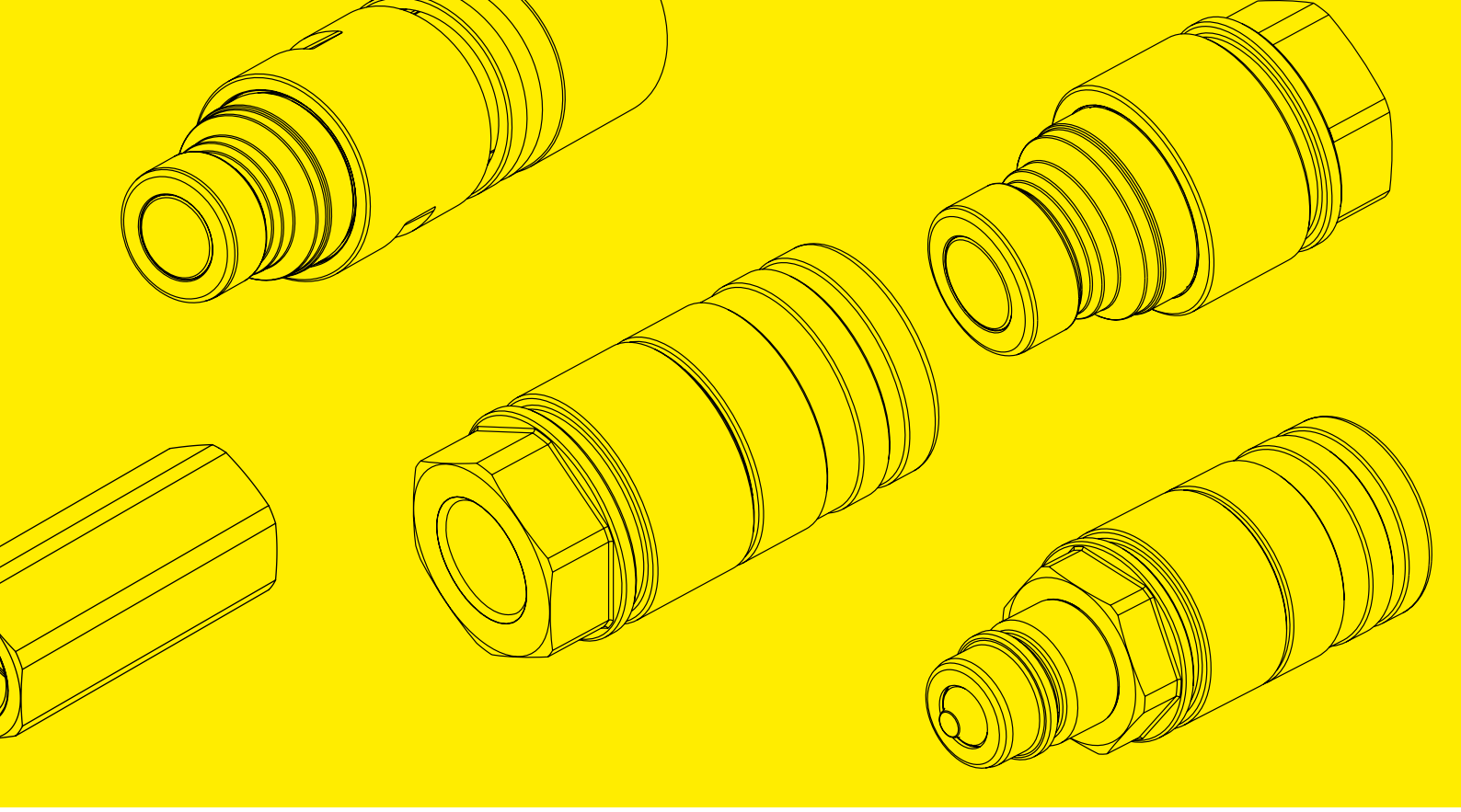

HEADQUARTER
Alfagomma SpA
Via Torri Bianche 1
20871 Vimercate (MB) Italy
marketing@alfagomma.com
www.alfagomma.com

Edition October 2019 - HO/AG-EN